5. Exploded Views and Parts List

Contents

5.1 Main · 5-2
5.2 Cover Unit · · · · · · · · · · · · · · · · · 5-4
5.3 Top Cover · · · · · · · · · · · · · · · · · 5-6
5.4.1 Rear Cover · · · · · · · · · · · · · · · · 5-8
5.4.2 Transfer Unit · · · · · · · · · · · · · · · 5-10
5.5 Frame · · · · · · · · · · · · · · · · · · · 5-12
5.6 LSU Cover · · · · · · · · · · · · · · · · · 5-16
5.7 Fuser Ass'y · · · · · · · · · · · · · · · · · 5-18
5.8 Main Drive · · · · · · · · · · · · · · · · · 5-20
5.9 Cartridge-Transfer · · · · · · · · · · · · · 5-24
5.10 Cartridge-Drum · · · · · · · · · · · · · · 5-27
5.11 Toner BK · · · · · · · · · · · · · · · · · 5-29
5.12 Toner CMY · · · · · · · · · · · · · · · · 5-31
5.13 Cassette · · · · · · · · · · · · · · · · · 5-33
5.14 SCF-Frame · · · · · · · · · · · · · · · · 5-35
5.15 SCF Cassette · · · · · · · · · · · · · · · 5-39

Samsung Color Laser Printer

The keynote of Product

High Performance /
High Quality Muti-path CLBP

- Model : only CLP 350N
- Speed(Color/Mono) : 5/20ppm(A4). 5/19ppm(Let)
- Printing resolution : 2,400 x 600 dpi
- Emulation : PCL6/PS3
- Memory expansion => Max.128MB
- Processor : 300MHz
- Interface : IEEE 802.3,Ethernet(10/100Mbps)
  Wireless: Not Supported
- Toner Cartridge :
  4K Toner(K), 2K toner(C, M, Y each)
- Printer Life : 200,000 pages
  Monthly Max. Duty : 25,000 pages/month

IT-Spares.eu

5.1 Main

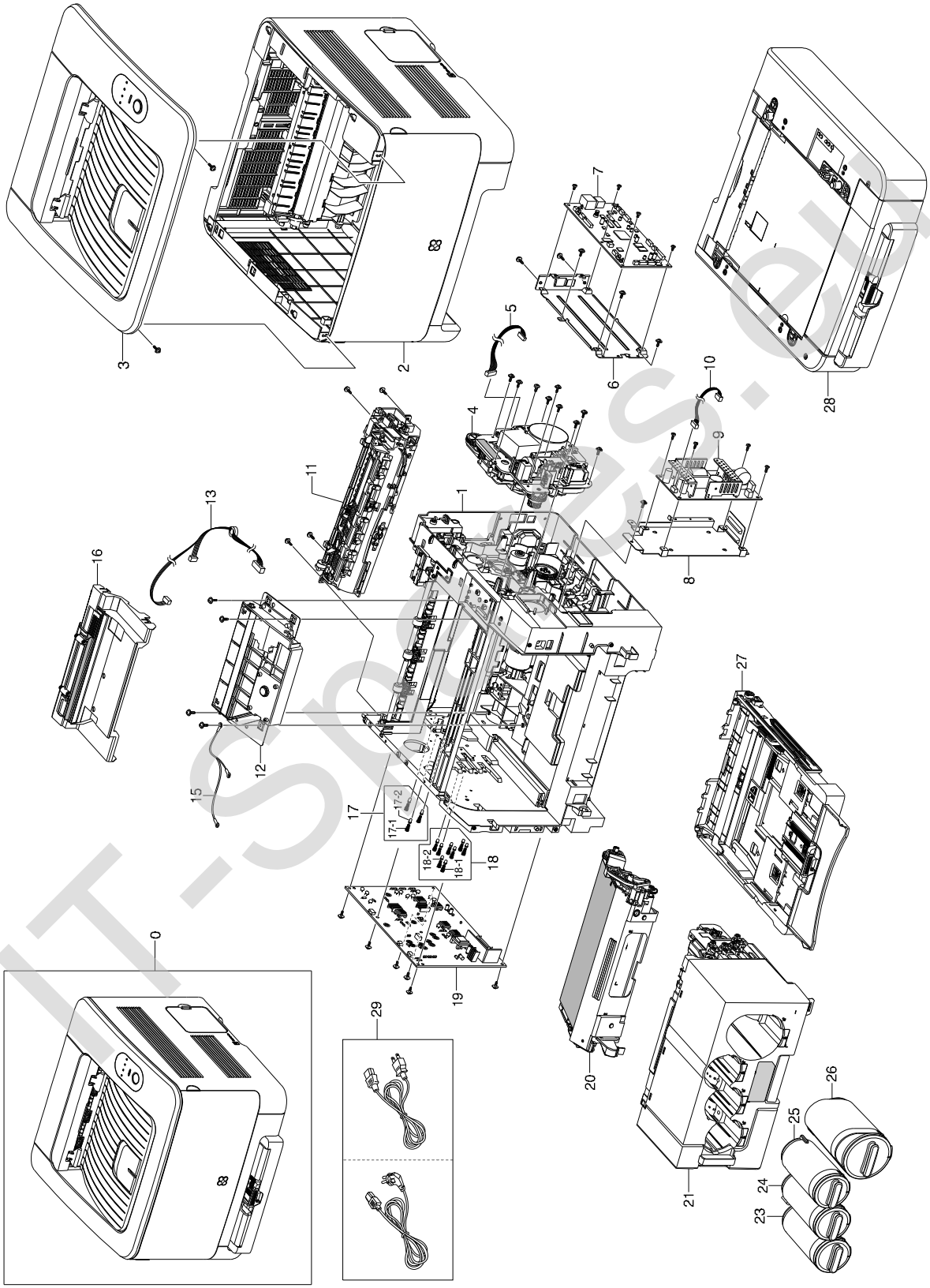

IT-Spares.eu

Main Parts List

SA : SERVICE AVAILABLE, SNA : SERVICE not AVAILABLE

Drawer#	SEC_Code	Description	QT'y	Service	Remark
5.1-0	CLP-350N	COLOR LBP 20 B / COLOR 5 PPM			
5.1-1	JC97-02994A	MEA UNIT-FRAME	1	SA	
5.1-2	JC97-03002A	MEA UNIT-COVER	1	SNA	
5.1-3	JC97-02992A	MEA UNIT-COVER TOP	1	SA	
5.1-4	JC96-04693A	ELA UNIT-DRIVE MAIN	1	SA	
5.1-5	JC39-00486A	CBF HARNESS-BLDC	1	SA	
5.1-6	JC63-00863A	SHIELD-P-MAIN LOWER	1	SNA	
5.1-7	JC92-01919A	PBA MAIN-CONTROLLER	1	SA	US.
5.1-7	JC92-01919B	PBA MAIN-CONTROLLER	1	SA	ETC.
5.1-8	JC63-01259A	SHIELD-SMPS	1	SNA	
5.1-9	JC44-00095A	SMPS-PSP_TYPE2_V1	1	SA	110V
5.1-9	JC44-00096A	SMPS-PSP_TYPE2_V2C	1	SA	220V
5.1-10	JC39-00670A	HARNESS-SMPS	1	SA	
5.1-11	JC96-04699A	ELA UNIT-FUSER	1	SA	110V
5.1-11	JC96-04700A	ELA UNIT-FUSER	1	SA	220V
5.1-12	JC59-00018F	UNIT-LSU	1	SA	
5.1-13	JC39-00483A	CBF HARNESS-LSU	1	SA	
5.1-15	JC39-00583A	CBF HARNESS-GND_FRAME	1	SA	
5.1-16	JC97-02656A	MEA UNIT-COVER LSU	1	SA	
5.1-17	JC97-02638A	MEA UNIT-TERMINAL GND	2	SA	
5.1-17-1	6107-001282	SPRING-CS	1	SA	
5.1-17-2	JC70-00050A	IPR-TERMINAL	1	SNA	
5.1-18	JC97-01771A	MEA UNIT-TERMINAL S	8	SA	
5.1-18-1	JC61-70929A	SPRING ETC-HV LARGE	1	SA	
5.1-18-2	JC70-00050A	IPR-TERMINAL	1	SNA	
5.1-19	JC44-00155A	HVPS	1	SA	
5.1-20	JC96-04770A	CARTRIDGE-TRANSFER	1	SA	
5.1-21	-	ELA UNIT-OPC DEV SET	1	SNA	
5.1-23	-	ELA UNIT-TONER TANK C	1	SNA	
5.1-24	-	ELA UNIT-TONER TANK M	1	SNA	
5.1-25	-	ELA UNIT-TONER TANK Y	1	SNA	
5.1-26	-	ELA UNIT-TONER TANK K	1	SNA	
5.1-27	JC97-02332D	MEA-CASSETTE	1	SA	
5.1-28	JC96-04690A	SECOND CASSETTE	1	SNA	
5.1-29	3903-000042	CBF-POWER CORD	1	SA	110V(US.)
5.1-29	3903-000042	CBF-POWER CORD	1	SA	220V(ETC.)

IT-spares.eu

5.2 Cover Unit

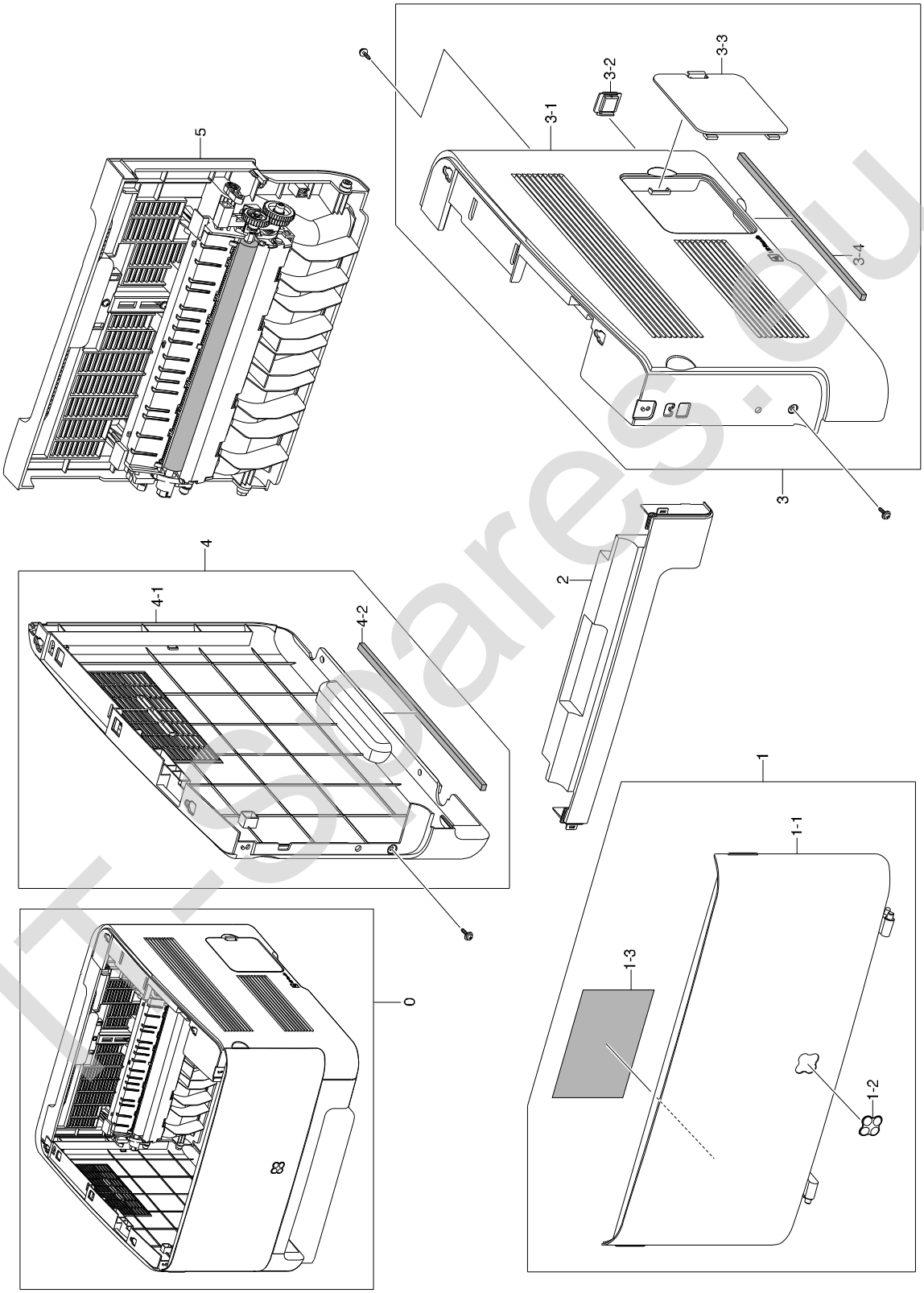

IT-spares.eu

Cover Unit Parts List

SA : SERVICE AVAILABLE, SNA : SERVICE not AVAILABLE

Drawer#	SEC_Code	Description	QT'y	Service	Remark
5.2-0	JC97-03002A	MEA UNIT-COVER	1	SNA	
5.2-1	JC97-02996A	MEA-UNIT COVER FRONT	1	SA	
5.2-1-1	JC63-01475A	COVER-FRONT	1	SA	
5.2-1-2	JC64-00369A	BADGE-COLOR	1	SNA	
5.2-1-3	JC68-01997A	LABEL-INSTALLATION	1	SNA	
5.2-2	JC63-01478A	COVER-FRONT_DUMMY	1	SA	
5.2-3	JC97-02995A	MEA-UNIT COVER RIGHT	1	SA	
5.2-3-1	JC63-01477A	COVER-SIDE R	1	SA	
5.2-3-2	JC63-01489A	COVER-DUMMY SIDE	1	SA	
5.2-3-3	JC67-00160A	CAP-NETWORK	1	SNA	
5.2-3-4	JC72-01410A	SPONGE-COVER_SIDE R	1	SNA	
5.2-4	JC97-03009A	MEA-UNIT COVER LEFT	1	SA	
5.2-4-1	JC63-01476A	COVER-SIDE L	1	SA	
5.2-4-2	JC72-01409A	SPONGE-COVER-SIDE L	1	SNA	
5.2-5	JC97-02993A	MEA UNIT-COVER REAR	1	SA	

IT-Spares.eu

5.3 Top Cover

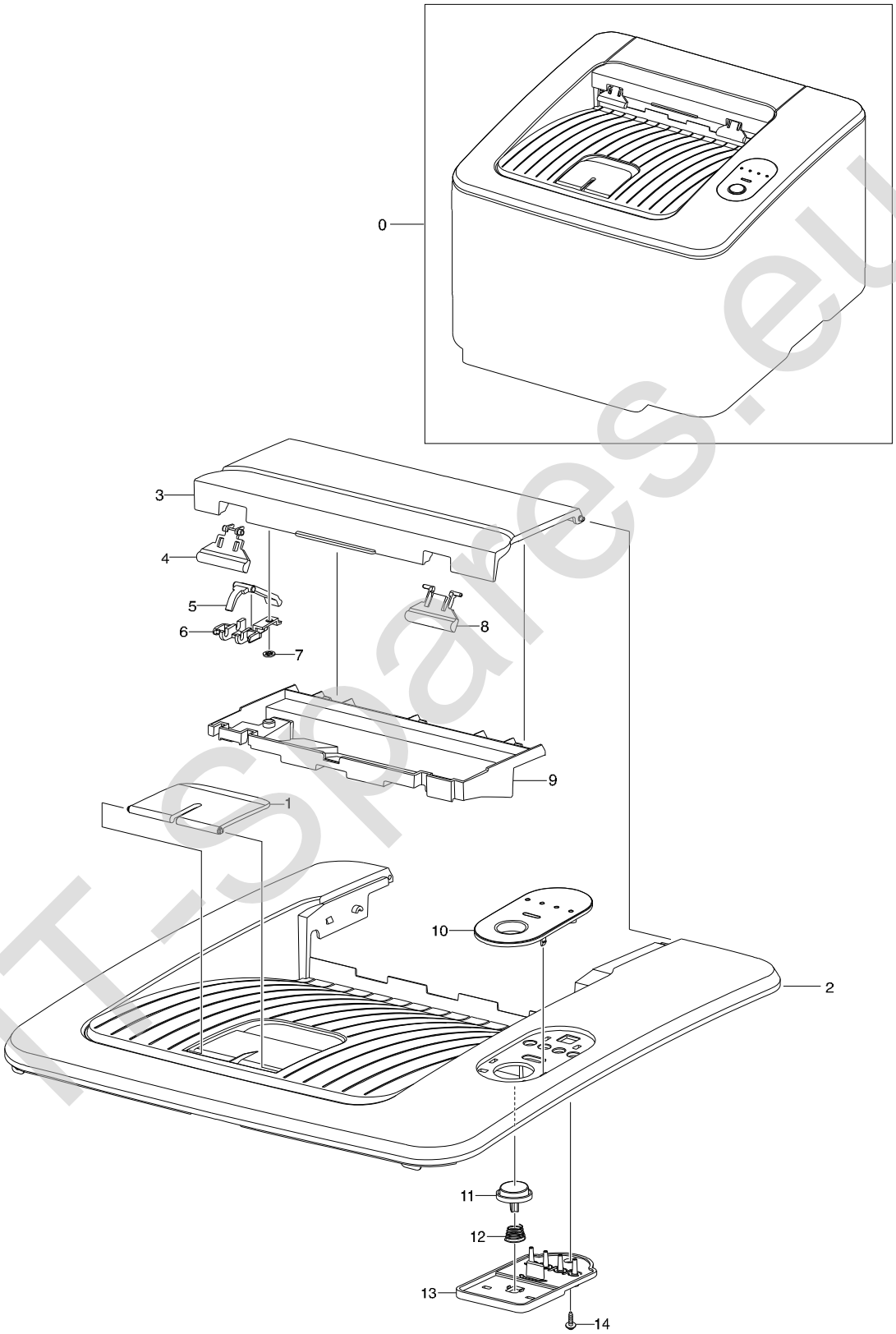

IT-Spares.eu

Top Cover Parts List

SA : SERVICE AVAILABLE, SNA : SERVICE not AVAILABLE

Drawer#	SEC_Code	Description	QT'y	Service	Remark
5.3-0	JC97-02992A	MEA UNIT-COVER TOP	1	SA	
5.3-1	JC63-01484A	COVER-STACKER	1	SA	
5.3-2	JC63-01483A	COVER-TOP	1	SA	
5.3-3	JC63-01482A	COVER-JAM	1	SA	
5.3-4	JC66-01296A	LEVER-BLOCKING	1	SNA	
5.3-5	JC66-01297A	LEVER-MID BLOCKING	1	SNA	
5.3-6	JC61-01761A	HOLDER-LEVER BLOCKING	1	SNA	
5.3-7	6044-000001	RING-CS	1	SNA	
5.3-8	JC72-01343A	PMO-SUB_M_STACKER	1	SA	
5.3-9	JC61-02166A	BRACKET-AIR CURTAIN	1	SA	
5.3-10	JC63-01481A	COVER-OPE	1	SA	
5.3-11	JC64-00337A	BUTTON-STOP	1	SA	
5.3-12	6107-001169	SPRING-CS	1	SA	
5.3-13	JC63-01480A	COVER-LED	1	SA	
5.3-14	6002-000440	SCREW-TAPPING	1	SNA	

IT-Spares.eu

5.4.1 Rear Cover

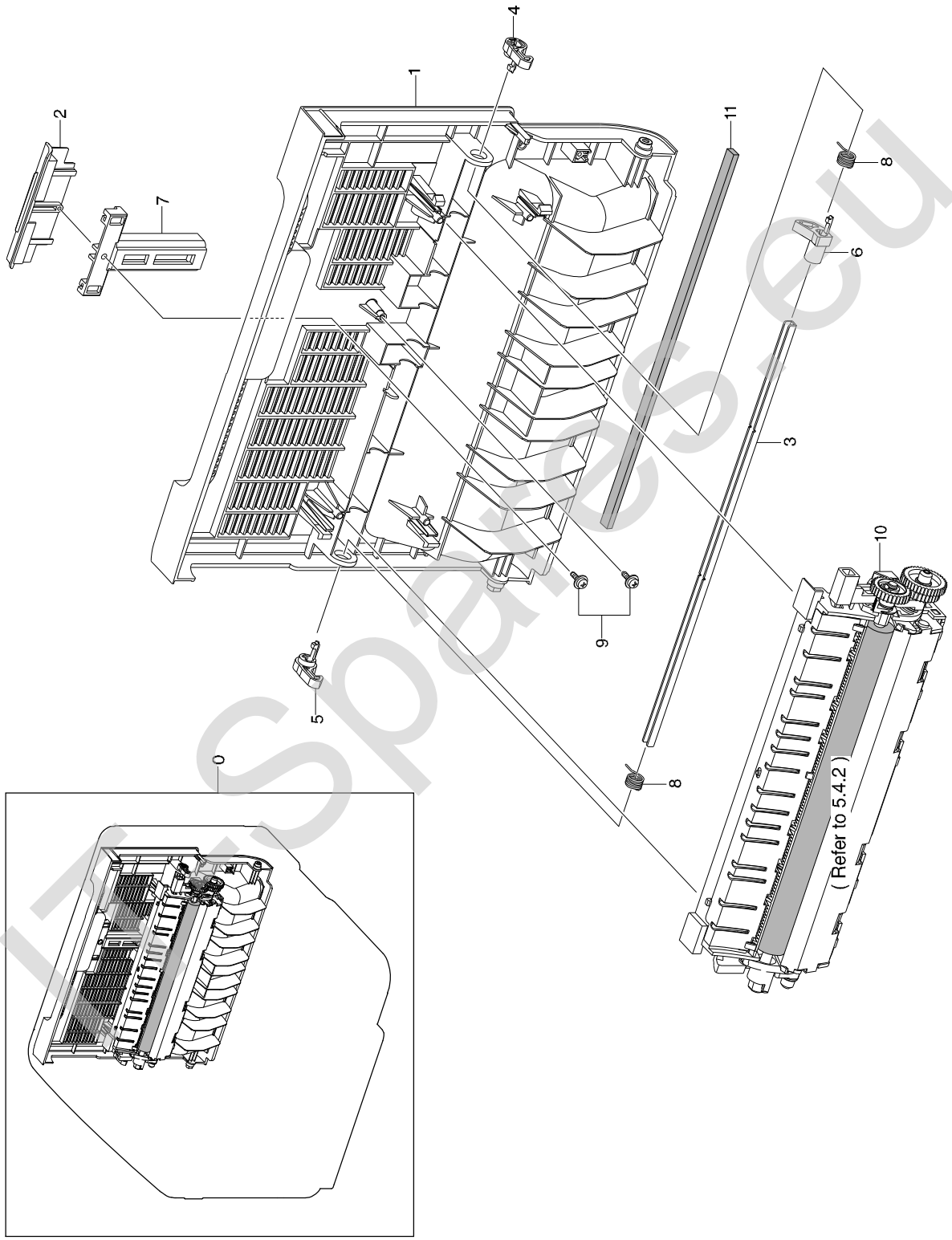

IT-Spares.eu

Rear Cover Parts List

SA : SERVICE AVAILABLE, SNA : SERVICE not AVAILABLE

Drawer#	SEC_Code	Description	QT'y	Service	Remark
5.4.1-0	JC97-02993A	MEA UNIT-COVER REAR	1	SA	
5.4.1-1	JC63-01479A	COVER-REAR	1	SA	
5.4.1-2	JC64-00336A	BUTTON-REAR OPEN	1	SA	
5.4.1-3	JC66-01089A	SHAFT-P-LOCKBAR REAR	1	SNA	
5.4.1-4	JC61-01461A	HOLDER-M-HOOK REAR R	1	SNA	
5.4.1-5	JC61-01456A	HOLDER-M-HOOK REAR L	1	SNA	
5.4.1-6	JC61-01462A	HOLDER-M-HOOK REAR C	1	SNA	
5.4.1-7	JC66-01587A	LEVER-REAR	1	SA	
5.4.1-8	6107-001268	SPRING-TS	2	SA	
5.4.1-9	6003-000196	SCREW-TAPTITE	2	SNA	
5.4.1-10	JC96-03990A	ELA UNIT-TRANSFER	1	SA	

IT-Spares.eu

5.4.2 Transfer Unit

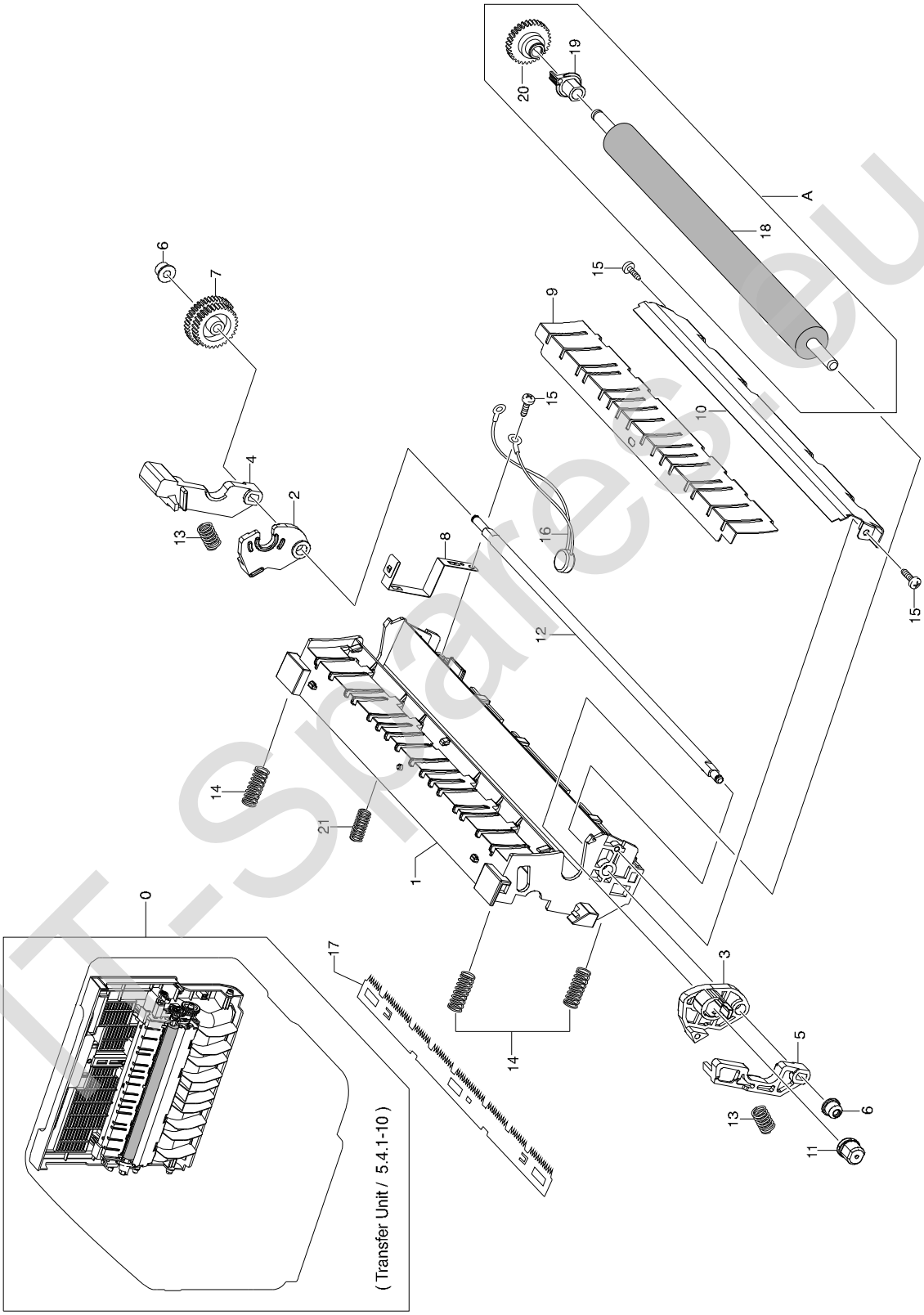

IT-Spares.eu

Transfer Unit Parts List

SA : SERVICE AVAILABLE, SNA : SERVICE not AVAILABLE

Drawer#	SEC_Code	Description	QT'y	Service	Remark
5.4.2-0	JC96-03990A	ELA UNIT-TRANSFER	1	SA	
5.4.2-1	JC61-01466A	FRAME-M-T2 BASE	1	SNA	
5.4.2-2	JC66-01121A	LEVER-M-T2 HOLDER R	1	SNA	
5.4.2-3	JC66-01122A	LEVER-M-T2 HOLDER L	1	SNA	
5.4.2-4	JC66-01074A	LEVER-M-RELEASE R	1	SNA	
5.4.2-5	JC66-01075A	LEVER-M-RELEASE L	1	SNA	
5.4.2-6	JC61-01469A	HOLDER-M-LOCATE SHAFT	2	SNA	
5.4.2-7	JC66-01081A	GEAR-RDCN T2 DRIVE	1	SA	
5.4.2-8	JC61-01467A	PLATE-P-T2 GROUND	1	SNA	
5.4.2-9	JC61-01468A	GUIDE-P-T2 OUTPUT	1	SNA	
5.4.2-10	JC61-01470A	GUIDE-P-T2 INPUT	1	SNA	
5.4.2-11	JC61-01543A	BUSH-CHARGE LEFT	1	SNA	
5.4.2-12	JC66-01072A	SHAFT-LOCATE	1	SNA	
5.4.2-13	6107-001290	SPRING-CS	2	SA	
5.4.2-14	6107-001278	SPRING-CS	3	SA	
5.4.2-15	6003-000282	SCREW-TAPTITE	3	SNA	
5.4.2-16	JC39-00036A	CBF HARNESS-OPE GND	1	SA	
5.4.2-17	JC70-10232A	IPR-PLATE SAW	1	SA	
5.4.2-18	JC66-01104A	ROLLER-TRANSFER	1	SNA	
5.4.2-19	JC61-01471A	HOLDER-M-T2 ROLLER R	1	SNA	
5.4.2-20	JC66-01073A	GEAR-T2 ROLLER	1	SA	
5.4.2-21	6107-001246	SPRING-CS	1	SNA	
5.4.2-A	JC97-02628A	MEA UNIT-T2 ROLLER	1	SA	

IT-Spares.eu

5.5 Frame 1

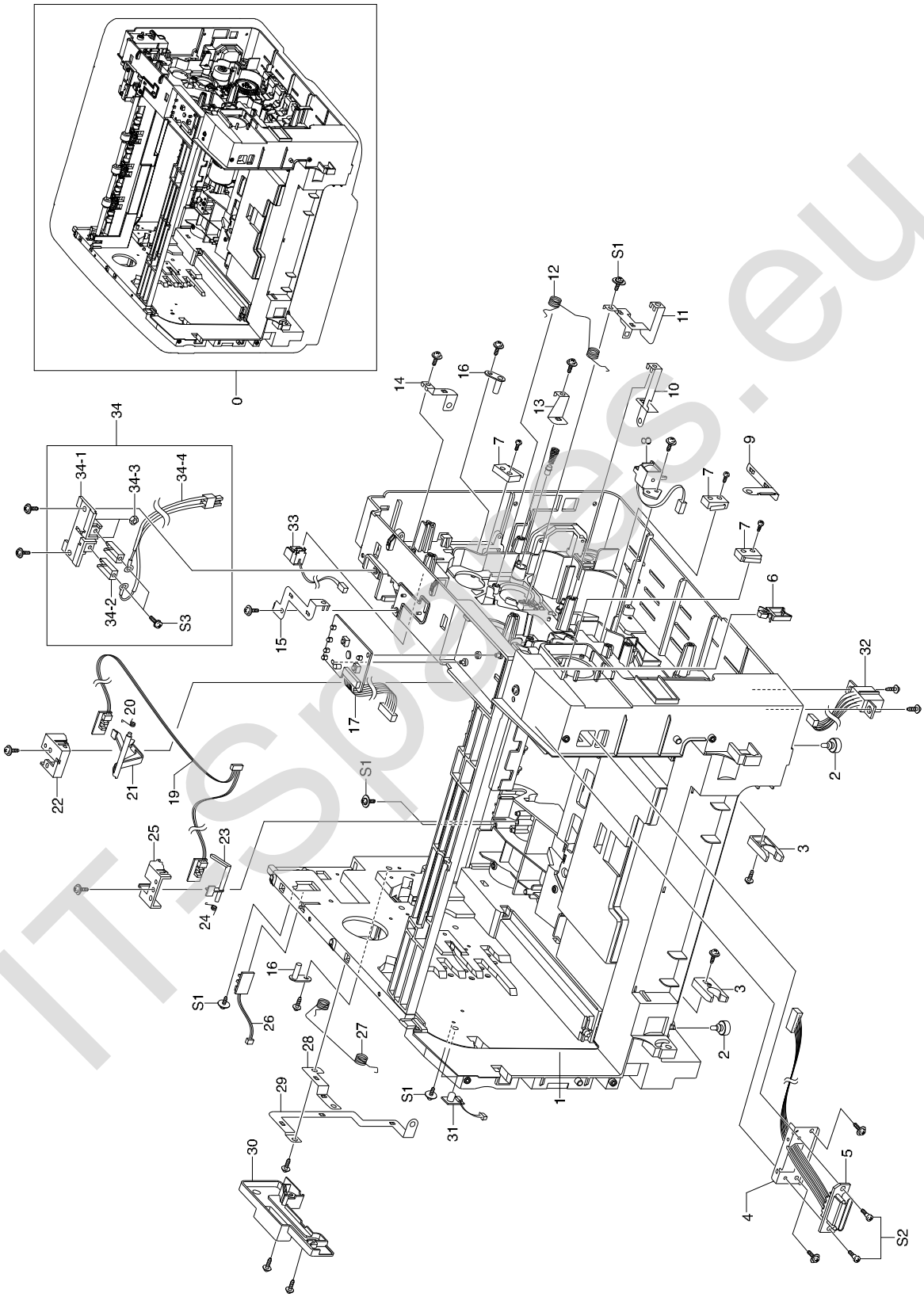

IT-Spares.eu

Frame 2

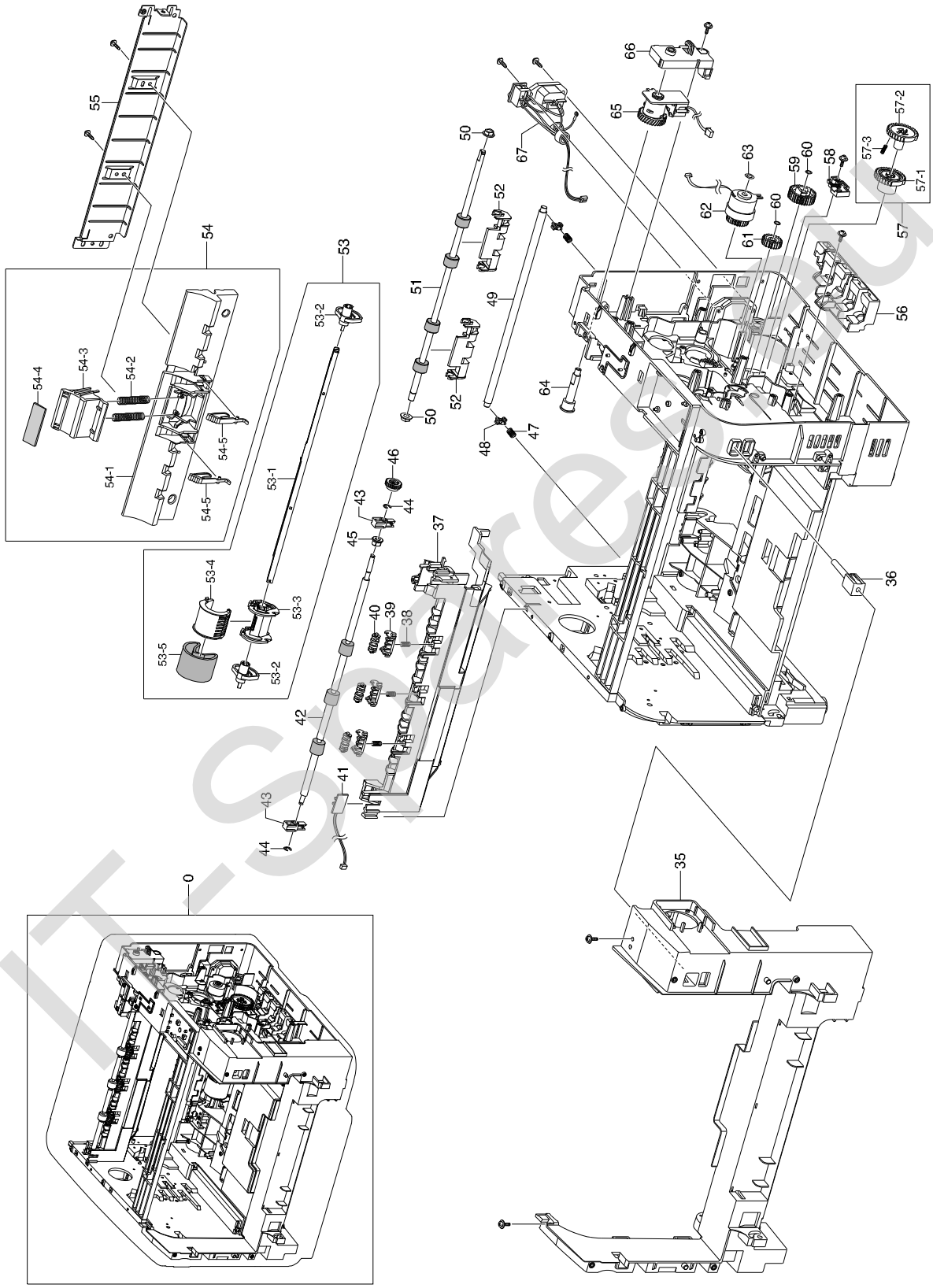

IT-Spares.ru

Frame Parts List

SA : SERVICE AVAILABLE, SNA : SERVICE not AVAILABLE

Drawer#	SEC_Code	Description	QT'y	Service	Remark
5.5-0	JC97-02994A	MEA UNIT-FRAME	1	SA	
5.5-1	JC61-01443A	FRAME-M BASE GOGH	1	SNA	
5.5-2	JC61-40001A	FOOT-ML80	2	SA	
5.5-3	JC66-00050A	CAM-CATCH	2	SA	
5.5-4	JC61-01521A	PLATE-P-DRAW CONNECTOR	1	SNA	
5.5-5	JC39-00774A	HARNESS-MAIN DRAWER	1	SA	
5.5-S2	6009-001396	SCREW-SPECIAL	2	SNA	
5.5-6	6502-001093	CABLE CLAMP	1	SA	
5.5-7	JC39-00498A	CBF HARNESS-COVER S/W	3	SA	
5.5-8	JC33-00021A	SOLENOID-PICK UP	1	SA	
5.5-9	JC61-01487A	PLATE-P-GROUND SCF	1	SA	
5.5-10	JC61-01483A	PLATE-P-GROUND LSU	1	SNA	
5.5-11	JC61-01485A	PLATE-P-GROUND REGI	1	SNA	
5.5-12	JC61-01547A	SPRING ETC-OPC LOCK R	1	SA	
5.5-13	JC61-01484A	PLATE-P-GROUND T2	1	SNA	
5.5-14	JC61-01476A	PLATE-P-GROUND FUSER	1	SNA	
5.5-15	JC61-01489A	PLATE-P-GROUND EXIT	1	SNA	
5.5-16	JC61-01537A	PLATE-P-SHAFT LACK	2	SNA	
5.5-17	JC92-01925A	PBA SUB-OPE	1	SA	
5.5-19	JC96-04002A	ELA HOU-REGI_EMP	1	SA	
5.5-20	JB61-00076A	SPRING ETC-TORSION DOC (CC2-F)	1	SA	
5.5-21	JC66-01119A	LEVER-M-ACTUATOR EMPTY	1	SA	
5.5-22	JC61-01481A	HOLDER-M-ACTUATOR EMPTY	1	SNA	
5.5-23	JC66-01133A	LEVER-M-ACTUATOR FEED	1	SNA	
5.5-24	JC61-00018A	SPRING ETC-SENSOR	1	SNA	
5.5-25	JC61-01480A	HOLDER-M-ACTUATOR FEED	1	SNA	
5.5-26	JC92-01718A	PBA SUB-EXIT	1	SA	
5.5-27	JC61-01546A	SPRING ETC-OPC LOCK L	1	SA	
5.5-28	JC61-01451A	PLATE-P-GROUND OPC L	1	SNA	
5.5-29	JC61-01486A	PLATE-P-GROUND PICKUP	1	SNA	
5.5-30	JC63-00854A	COVER-M-GROUND OPC	1	SNA	
5.5-31	JC92-01723A	PBA SUB-WASTE_T	1	SA	
5.5-32	JC39-00606A	HARNESS-SCF	1	SA	
5.5-33	JC39-00493A	CBF HARNESS-THER	1	SA	
5.5-34	JC97-02639A	MEA UNIT-FU TERMINAL	1	SA	
5.5-34-1	JC72-41010A	PMO-HOUSING TERMINAL	1	SA	
5.5-34-2	JC70-10961A	IPR-TERMINAL FU	2	SA	
5.5-34-3	6021-000222	NUT-HEXAGON	2	SNA	
5.5-34-4	JC39-00581A	CBF HARNESS-FUSER_AC	1	SA	
5.5-34-S3	6006-000127	SCREW-MACHINE	2	SNA	
5.5-37	JC61-01477A	FRAME-M-EXIT	1	SNA	
5.5-38	6107-001163	SPRING-CS	3	SA	
5.5-39	JC61-01568A	HOLDER-M-EXIT F DOWN	3	SNA	

IT-spares.eu

Frame Parts List

SA : SERVICE AVAILABLE, SNA : SERVICE not AVAILABLE

Drawer#	SEC_Code	Description	QT'y	Service	Remark
5.5-40	JC66-01149A	ROLLER-EXIT MAIN	3	SA	
5.5-41	JC92-01718A	PBA SUB-EXIT	1	SA	
5.5-42	JC66-01040A	ROLLER-EXIT F DOWN	1	SNA	
5.5-43	JC61-00829A	HOLDER-BEARING EXIT F/DOWN	2	SA	
5.5-44	6044-000159	RING-C	2	SA	
5.5-45	JC61-00424A	BUSH-4	1	SA	
5.5-46	JC66-00810A	GEAR-EXIT_DRV17	1	SA	
5.5-47	JC61-70911A	SPRING ETC-EXIT ROLL FD	2	SA	
5.5-48	JC61-00829A	HOLDER-BEARING EXIT F/DOWN	2	SNA	
5.5-49	JC66-01120A	SHAFT-FEED IDLE	1	SNA	
5.5-50	JC61-00699A	BUSH-D6/L4	3	SA	
5.5-51	JC66-01128A	ROLLER-REGI	1	SNA	
5.5-52	JC61-01570A	GUIDE-M-PAPER	2	SNA	
5.5-53	JC97-03006A	MEA UNIT-PICKUP ROLL	1	SA	
5.5-53-1	JC66-01080A	SHAFT-P-PICKUP	1	SNA	
5.5-53-2	JC66-01596A	CAM-PICK UP	2	SNA	
5.5-53-3	JC61-01151A	HOUSING-M-PICK_U	1	SA	
5.5-53-4	JC61-01173A	HOUSING-M-PICK_UP B	1	SA	
5.5-53-5	JC73-00211A	RUBBER-PICK_UP	1	SA	
5.5-54	not assign	PICP UP ASSEMBLY	1	SNA	
5.5-54-1	JC61-01473A	GUIDE-M-PICK UP	1	SA	
5.5-54-2	JC61-70911A	SPRING ETC-EXIT ROLL FD	2	SA	
5.5-54-3	JC61-01787A	HOLDER-PAD	1	SA	
5.5-54-4	JC69-00961A	PAD-FRICTION	1	SA	
5.5-54-5	JC66-00815A	LEVER-M-KICKER P/U	2	SA	
5.5-55	JC61-01790A	PLATE-PICK UP	1	SNA	
5.5-56	JC61-01478A	GUIDE-M-HARNESS	1	SNA	
5.5-57	JC97-02688A	MEA UNIT-PICK UP GEAR	1	SA	
5.5-57-1	JC66-01076A	GEAR-PICK UP A	1	SA	
5.5-57-2	JC66-01077A	GEAR-PICK UP B	1	SA	
5.5-57-3	6107-001167	SPRING-CS	1	SA	
5.5-58	JC61-01548A	HOLDER-M-CAM	2	SA	
5.5-59	JC66-01056A	GEAR-REGI DRIVE	1	SA	
5.5-60	6044-000001	RING-CS	2	SA	
5.5-61	JC66-00346A	GEAR-MP/DUP DRV	1	SA	
5.5-62	JC47-00009C	CLUTCH-REGI	1	SA	
5.5-63	6031-001255	WASHER-PLAIN	9	SNA	
5.5-64	JC66-01207A	SHAFT-M-CLUTCH FUSER	1	SA	
5.5-65	JC47-00014A	MEP-CLUTCH CAM	1	SA	
5.5-66	JC61-01566A	HOLDER-M-CLUTCH FUSER	1	SNA	
5.5-67	JC39-00497A	CBF HARNESS-INLET	1	SA	

IT-spares.eu

5.6 LSU Cover

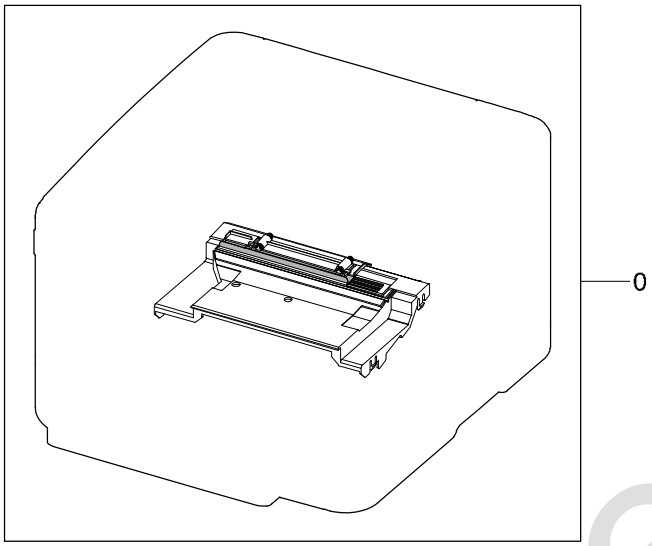

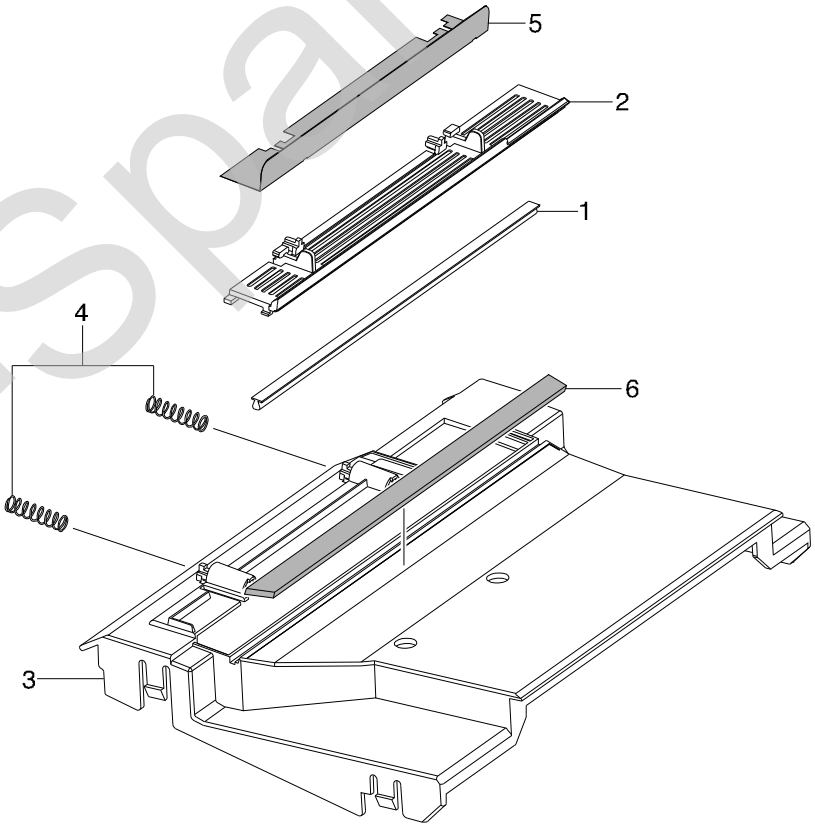

IT-Spares.eu

LSU Cover Parts List

SA : SERVICE AVAILABLE, SNA : SERVICE not AVAILABLE

Drawer#	SEC_Code	Description	QT'y	Service	Remark
5.6-0	JC97-02656A	MEA UNIT-COVER LSU	1	SA	
5.6-1	JC67-00168A	BRUSH-LSU	1	SNA	
5.6-2	JC64-00267A	SHUTTER-LSU	1	SNA	
5.6-3	JC63-00839A	COVER-M-LSU	1	SNA	
5.6-4	6107-001295	SPRING-CS	2	SNA	
5.6-5	JC63-01093A	SHEET-LSU FRONT	1	SNA	
5.6-6	JC62-00338A	SEAL-COVER LSU	1	SNA	

IT-Spares.eu

5.7 Fuser Ass'y

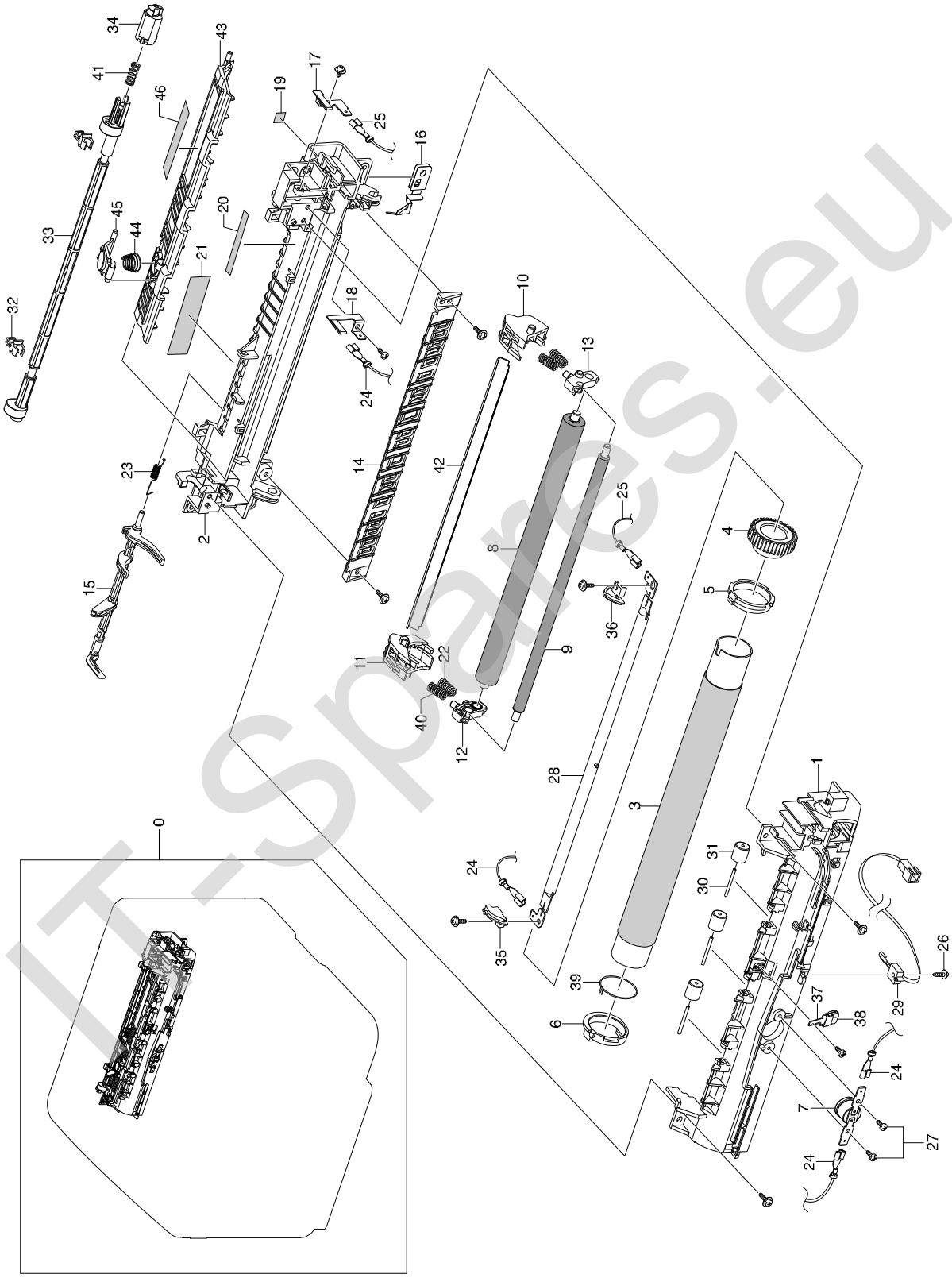

IT-Spares.eu

Fuser Ass'y Parts List

SA : SERVICE AVAILABLE, SNA : SERVICE not AVAILABLE

Drawer#	SEC_Code	Description	QT'y	Service	Remark
5.7-0	JC96-04699A	ELA UNIT-FUSER	1	SA	110V
5.7-0	JC96-04700A	ELA UNIT-FUSER	1	SA	220V
5.7-1	JC61-01474A	FRAME-M-UPPER FUSER	1	SNA	
5.7-2	JC61-01475A	FRAME-M-LOWER FUSER	1	SNA	
5.7-3	JC66-01078A	ROLLER-HEAT	1	SA	
5.7-4	JC66-00669A	GEAR-FUSER	1	SA	
5.7-5	JC66-10902A	BEARING-H/R L	1	SA	
5.7-6	JC72-00814A	PMO-BEARING H/R-F	1	SA	
5.7-7	4712-001027	THERMOSTAT	1	SA	
5.7-8	JC66-01079A	ROLLER-PRESSURE	1	SA	
5.7-9	JC66-01111A	ROLLER-PRESSURE SHAFT	1	SNA	
5.7-10	JC61-01490A	HOLDER-M-BUSH 2PR_R	1	SNA	
5.7-11	JC61-01491A	HOLDER-M-BUSH 2PR_L	1	SNA	
5.7-12	JC61-01534A	BUSH-M-2PR L	1	SNA	
5.7-13	JC61-01535A	BUSH-M-2PR R	1	SNA	
5.7-14	JC61-01522A	GUIDE-M-INPUT FUSER	1	SNA	
5.7-15	JC66-01110A	LEVER-M-ACTUATOR EXIT	1	SNA	
5.7-16	JC61-01476A	PLATE-P-GROUND FUSER	1	SNA	
5.7-17	JC70-00518A	ELECTRODE-P-AC R	1	SNA	
5.7-18	JC70-00519A	ELECTRODE-P-AC L	1	SNA	
5.7-22	6107-001246	SPRING-CS	2	SNA	
5.7-23	JC61-01271A	SPRING ETC-ACTUATOR	1	SA	
5.7-24	JC39-00500A	CBF HARNESS-FUSE_LINK1	2	SA	
5.7-25	JC39-00501A	CBF HARNESS-FUSE_LINK2	1	SA	
5.7-28	4713-001209	LAMP-HALOGEN	1	SA	110V
5.7-28	4713-001210	LAMP-HALOGEN	1	SA	220V
5.7-29	1404-001368	THERMISTOR-NTC ASSY	1	SA	
5.7-30	JC70-00064A	IPR-PIN ROLLER EXIT	3	SNA	
5.7-31	JC72-20902A	PEX-ROLLER F/UP(2)	3	SA	
5.7-32	JC72-00382A	PMO-BUSHING TX	2	SNA	
5.7-33	JC66-01206A	SHAFT-M-CAM FUSER	1	SNA	
5.7-34	JC61-01647A	HOLDER-M-SHAFT FUSER	1	SNA	
5.7-35	JC66-01147A	LEVER-M-RELEASE	1	SNA	
5.7-36	JC66-01148A	LEVER-M-LINK FUSER	1	SA	
5.7-37	JC66-01309A	ROLLER-DUMMY	1	SNA	
5.7-39	JC61-01679A	SPRING ETC-GROUND	1	SA	
5.7-40	6107-001267	SPRING-CS	2	SA	
5.7-41	6107-001290	SPRING-CS	1	SA	
5.7-42	JC97-02778A	MEA UNIT-GUIDE PR	1	SNA	

IT-spares.eu

5.8 Main Drive 1

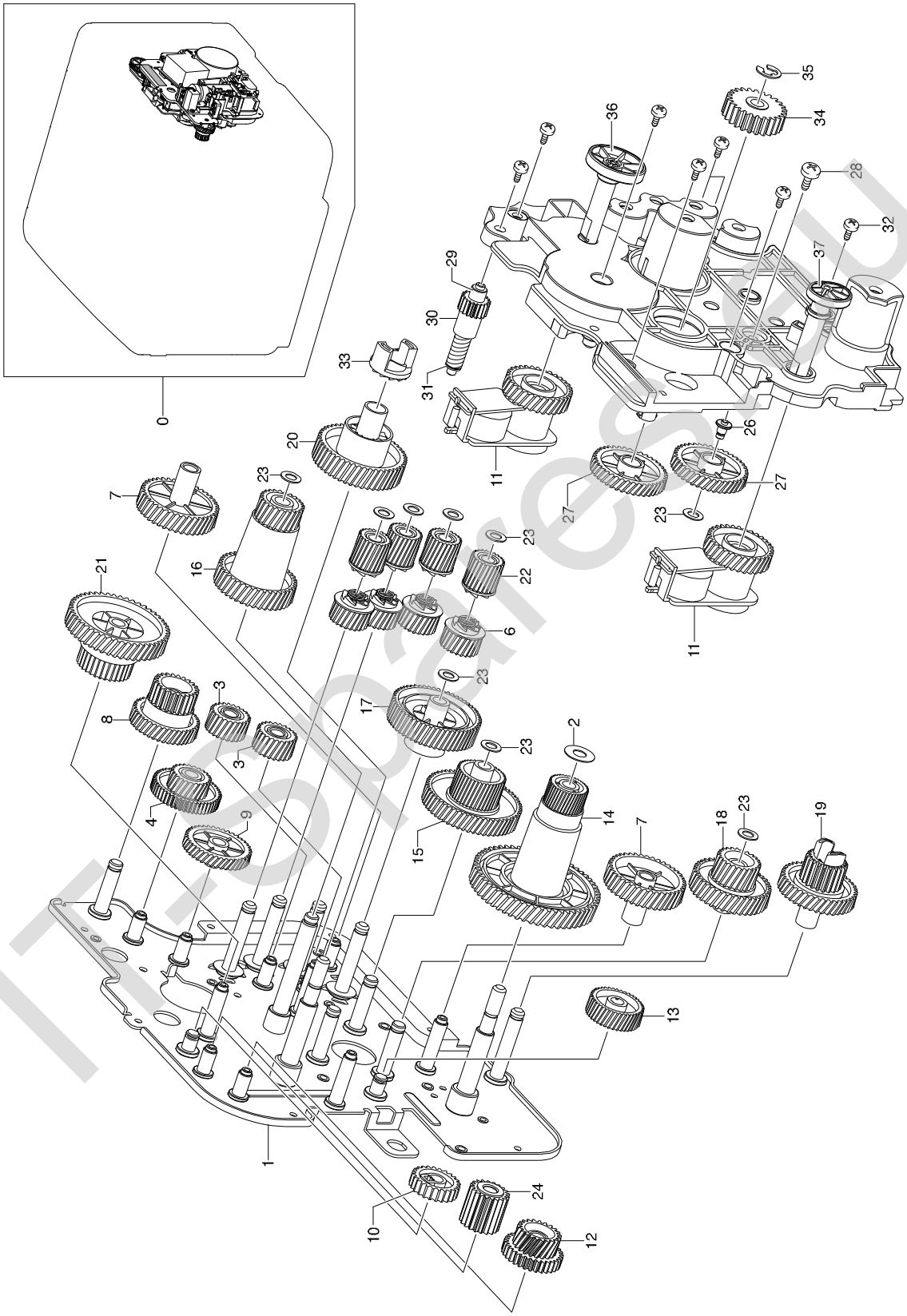

IT-spares.eu

Main Drive 2

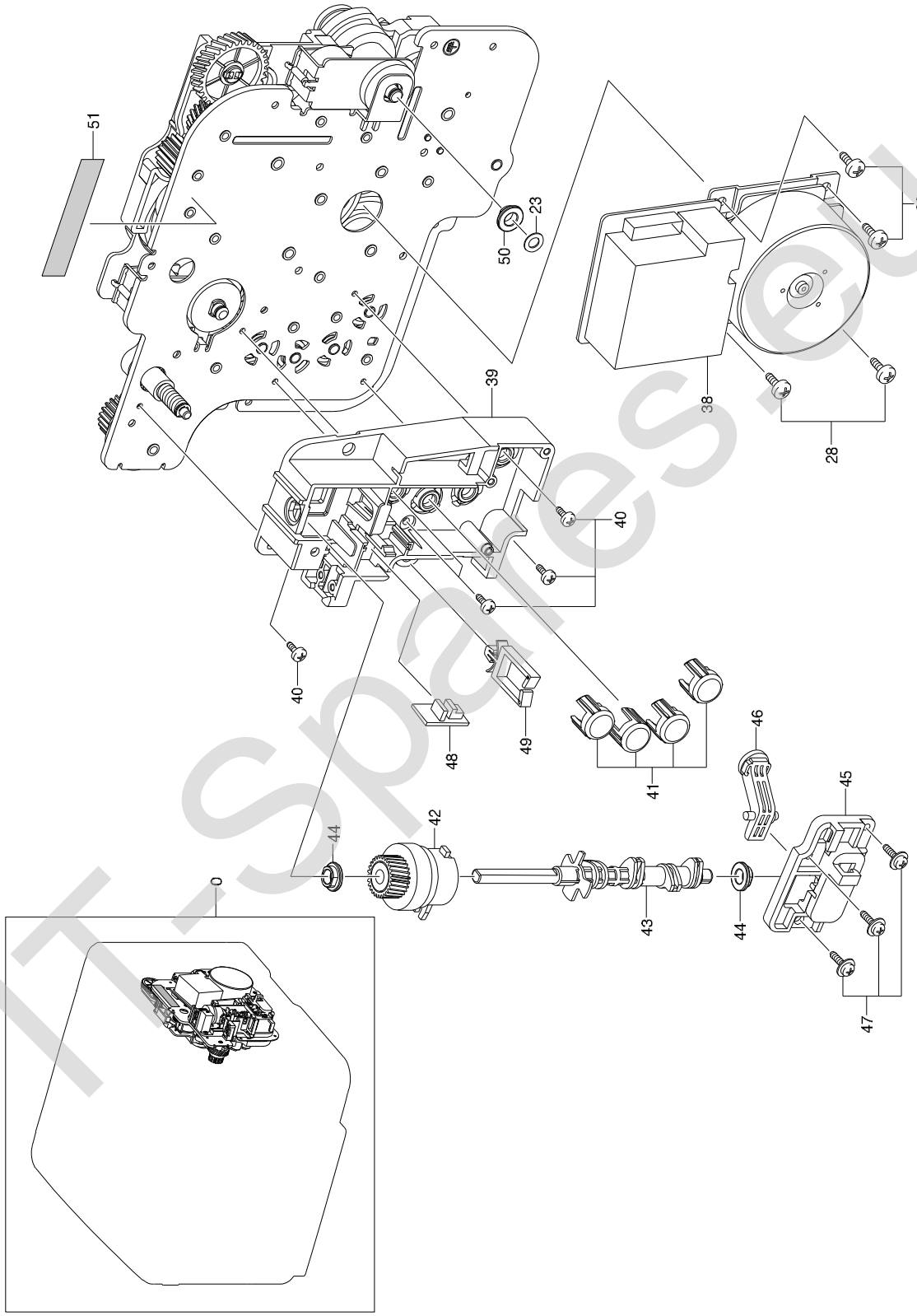

IT-Spares.eu

Main Drive Parts List

SA : SERVICE AVAILABLE, SNA : SERVICE not AVAILABLE

Drawer#	SEC_Code	Description	QT'y	Service	Remark
5.8-0	JC96-04693A	ELA UNIT-DRIVE MAIN	1	SA	
5.8-1	JC61-01450A	BRACKET-P-DRIVE MOTOR	1	SNA	
5.8-3	JC66-01042A	GEAR-IDLE DEVE Z19	2	SA	
5.8-4	JC66-01052A	GEAR-RDCN DEVE CAM	1	SA	
5.8-5	JC66-01041A	GEAR-DEVE COUPLING	4	SA	
5.8-7	JC66-01047A	GEAR-IDLE Z39	2	SA	
5.8-8	JC66-01065A	GEAR-TONER DRIVE	1	SA	
5.8-9	JC66-01046A	GEAR-IDLE Z33	1	SA	
5.8-10	JC66-00763A	GEAR-M-PICK UP IDLE	1	SA	
5.8-11	JC47-00007E	CLUTCH-CAM	2	SA	
5.8-12	JC66-01208A	GEAR-RDCN FUSER CAM	1	SA	
5.8-13	JC66-01045A	GEAR-IDLE ITB Z43	1	SA	
5.8-14	JC66-01048A	GEAR	1	SA	
5.8-15	JC66-01054A	GEAR-RDCN OPC	1	SA	
5.8-17	JC66-01051A	GEAR-RDCN DEVE	1	SA	
5.8-18	JC66-01055A	GEAR-RDCN P_PATH	1	SA	
5.8-19	JC66-01050A	GEAR	1	SA	
5.8-20	JC66-01044A	GEAR-FUSER DRIVE 1	1	SA	
5.8-21	JC66-01053A	GEAR-RDCN EXIT	1	SA	
5.8-22	JC66-01043A	GEAR-DEVE DRIVE	4	SA	
5.8-23	6031-001255	WASHER-PLAIN	1	SNA	
5.8-24	JC66-00771A	GEAR-_M_IDLE PICKUP	1	SA	
5.8-25	JC61-01459A	BRACKET-M-DRIVE FRONT	1	SNA	
5.8-26	JC66-01061A	SHAFT-IDLE D8	1	SNA	
5.8-27	JC66-01064A	GEAR-IDLE Z37	2	SA	
5.8-29	JC66-01060A	SHAFT-WORM GEAR	1	SNA	
5.8-30	JC66-01057A	GEAR-WORM DEVE CAM	1	SA	
5.8-31	6044-000159	RING-C	1	SA	
5.8-32	6001-000130	SCREW-MACHINE	7	SNA	
5.8-33	JC66-01070A	LATCH-M-HUB CLUTCH	1	SNA	
5.8-34	JC66-01155A	GEAR-FUSER RDCN OUT V	1	SNA	
5.8-35	6044-000231	RING-E	1	SNA	
5.8-36	JC66-01068A	SHAFT-M-T2 CAM	1	SA	
5.8-37	JC66-01067A	SHAFT-M-ITB CLEAN CAM	1	SA	
5.8-38	JC31-00041A	MOTOR DC-DEVE DRIVE	1	SA	
5.8-40	6003-000301	SCREW-TAPTITE	1	SNA	
5.8-41	JC61-02173A	BRACKET-DEVE CAM	1	SNA	
5.8-42	6003-000269	SCREW-TAPTITE	5	SA	
5.8-43	JC67-00130A	CAP-M-PUSH COUPLING	4	SA	
5.8-44	JC47-00018A	CLUTCH-DEVE CAM	1	SNA	
5.8-45	JC66-01590A	SHAFT-DEVE CAM	1	SA	
5.8-46	JC92-01720A	PBA SUB-DEVE_HOME	1	SA	
5.8-47	JC61-01453A	HOLDER-M-LINK BLACK	1	SA	

IT-Spares.eu

Main Drive Parts List

SA : SERVICE AVAILABLE, SNA : SERVICE not AVAILABLE

Drawer#	SEC_Code	Description	QT'y	Service	Remark
5.8-48	JC66-01097A	LINK-M-PUSH BLACK CAP	1	SA	
5.8-49	JC61-00699A	BUSH-D6/L4	3	SA	
5.8-50	6502-001093	CABLE CLAMP	1	SA	
5.8-52	JF68-10532B	LABEL(P)-BAR CODE	1	SNA	

IT-Spares.eu

5.9 Cartridge-Transfer

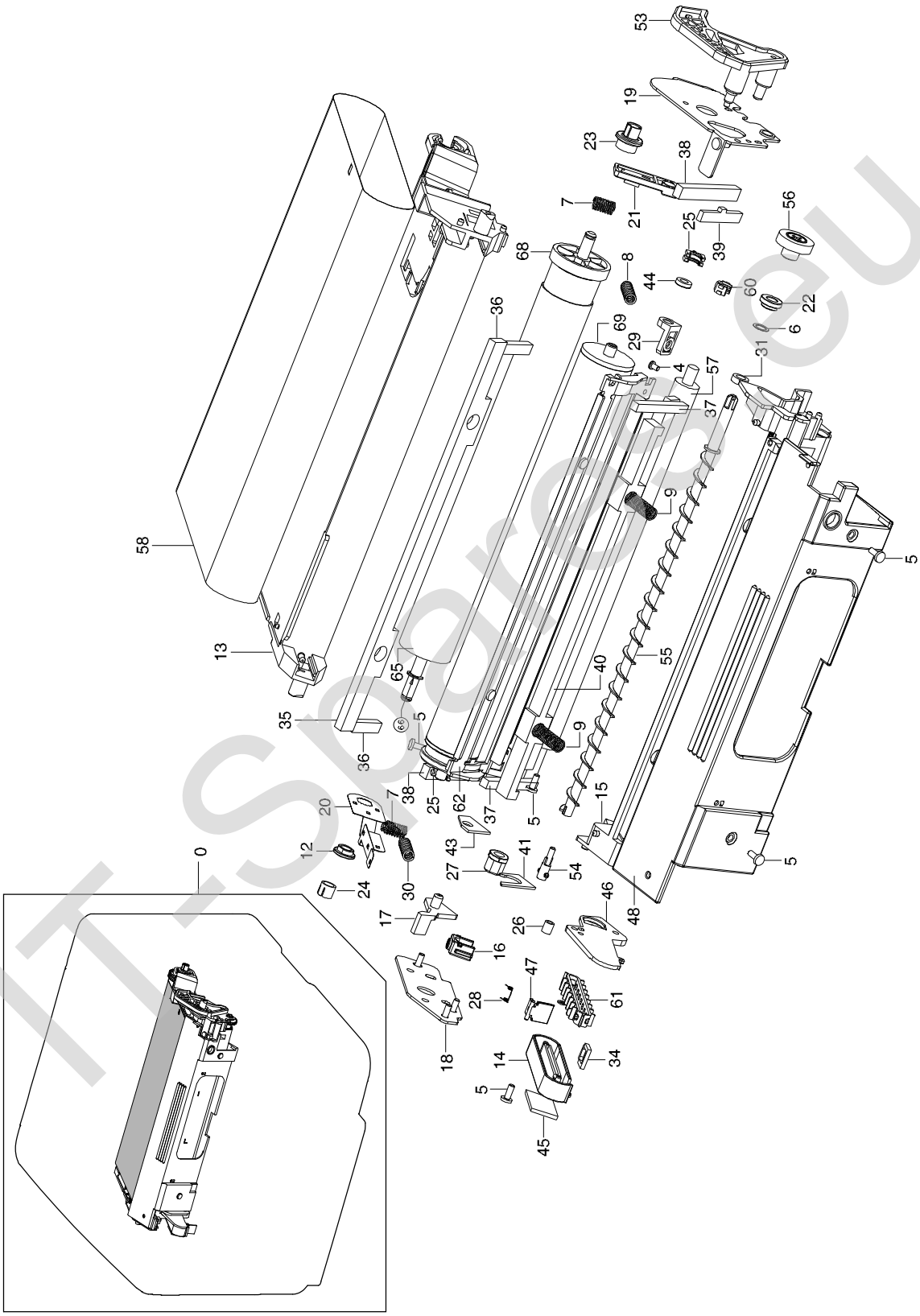

IT-Spare.eu

Cartridge-Transfer Parts List

SA : SERVICE AVAILABLE, SNA : SERVICE not AVAILABLE

Drawer#	SEC_Code	Description	QT'y	Service	Remark
5.9-0	JC96-04770A	CARTRIDGE-TRANSFER	1	SA	
5.9-3	0604-001257	PHOTO-INTERRUPTER	1	SNA	
5.9-4	6001-000485	SCREW-MACHINE	2	SNA	
5.9-5	6003-000282	SCREW-TAPTITE	11	SNA	
5.9-6	6031-000019	WASHER-PLAIN	3	SA	
5.9-7	6107-001287	SPRING-CS	2	SNA	
5.9-8	6107-001313	SPRING-CS	1	SNA	
5.9-9	6107-001306	SPRING-CS	2	SA	
5.9-11	JC39-00773A	HARNESS-ITB	1	SNA	
5.9-12	JC61-00699A	BUSH-D6/L4	1	SA	
5.9-13	JC61-01494A	FRAME-M-ITB	1	SNA	
5.9-14	JC61-01495A	FRAME-M-WASTE ITB	1	SNA	
5.9-15	JC61-01497A	HOUSING-M-CLEANING ITB	1	SNA	
5.9-16	JC61-01498A	HOLDER-M-BUSH CHARGE	1	SNA	
5.9-17	JC61-01499A	GUIDE-M-POLE ITB	1	SNA	
5.9-18	JC61-01502A	BRACKET-P-HOUSING LEFT	1	SNA	
5.9-19	JC61-01503A	BRACKET-P-HOUSING RIGHT	1	SNA	
5.9-20	JC61-01504A	PLATE-P-GND ITB	1	SNA	
5.9-21	JC61-01506A	HOLDER-M-HOME SENSOR	1	SNA	
5.9-22	JC61-01536A	BUSH-M-CHARGE CLEANING	1	SNA	
5.9-23	JC61-01539A	BUSH-M-DRIVE ITB	1	SNA	
5.9-24	JC61-01540A	BUSH-M-ITB	1	SNA	
5.9-25	JC61-01541A	BUSH-M-TR ITB	2	SNA	
5.9-26	JC61-01542A	BUSH-M-IDLER WASTE BELT	1	SNA	
5.9-27	JC61-01543A	BUSH-CHARGE LEFT	1	SNA	
5.9-28	JC61-01701A	SPRING ETC-SHUTTER	1	SNA	
5.9-29	JC61-01777A	HOLDER-BLADE ITB	2	SNA	
5.9-30	JC61-01803A	SPRING ETC-GROUND ITB	1	SNA	
5.9-31	JC62-00210A	SEAL-AUGER OPC	1	SNA	
5.9-32	JC62-00212A	SEAL-BELT ITB	1	SNA	
5.9-33	JC62-00213A	SEAL-LOW ITB	1	SNA	
5.9-34	JC62-00217A	SEAL-COVER WASTE	1	SNA	
5.9-35	JC62-00219A	SEAL-BACK ITB	1	SNA	
5.9-36	JC62-00221A	SEAL-BACK ITB RIGHT	2	SNA	
5.9-37	JC62-00222A	SEAL-SIDE ITB LEFT	2	SNA	
5.9-38	JC62-00223A	SEAL-SIDE ITB RIGHT	2	SNA	
5.9-39	JC62-00229A	SEAL-BLADE ITB LEFT	2	SNA	
5.9-40	JC62-00232A	SEAL-TOP ITB	1	SNA	
5.9-41	JC62-00257A	SEAL-FRAME WASTE ITB	1	SNA	
5.9-42	JC62-00258A	SEAL-WASTE OPC	1	SNA	
5.9-43	JC62-00281A	SEAL-HOUSING ITB L	1	SNA	
5.9-44	JC62-00282A	SEAL-HOUSING ITB R	1	SNA	
5.9-45	JC62-00326A	SEAL-WASTE SIDE	1	SNA	

IT-spares.eu

Cartridge-Transfer Parts List

SA : SERVICE AVAILABLE, SNA : SERVICE not AVAILABLE

Drawer#	SEC_Code	Description	QT'y	Service	Remark
5.9-46	JC63-00857A	COVER-M-WASTE ITB	1	SNA	
5.9-47	JC63-00859A	COVER-M-WASTE EXIT	1	SNA	
5.9-48	JC63-00862A	COVER-M-HANDLE ITB	1	SNA	
5.9-49	JC63-01049A	SHEET-HOUSING ITB	1	SNA	
5.9-50	JC63-01110A	SHEET-BRACKET ITB	1	SNA	
5.9-51	JC63-01124A	SHEET-HOUSING ITB F	1	SNA	
5.9-52	JC63-01170A	SHEET-BLADE ITB	1	SNA	
5.9-53	JC66-01082A	ARM-M-BLADE ITB	1	SNA	
5.9-54	JC66-01083A	SHAFT-M-BELT WASTE	1	SNA	
5.9-55	JC66-01085A	SHAFT-M-AUGER ITB	1	SNA	
5.9-56	JC66-01087A	GEAR-AUGER ITB	1	SNA	
5.9-57	JC66-01131A	ROLLER-T1	1	SNA	
5.9-58	JC66-01314B	DRUM-ITB BELT	1	SNA	
5.9-59	JC68-10914D	LABEL(P)-SERIAL NO	1	SNA	
5.9-60	JC72-40332A	PMO-BUSHING_CHARGE	1	SNA	
5.9-61	JC73-00222A	RUBBER-BELT WASTE ITB	1	SNA	
5.9-62	JC97-02645A	MEA UNIT-BLADE ITB	1	SNA	
5.9-63	JC61-01500A	BRACKET-P-CLEANING ITB	1	SNA	
5.9-64	JC61-01673A	BLADE-CLEANING ITB	1	SNA	
5.9-65	JC97-02646A	MEA UNIT-ROLL DRV ITB	1	SNA	
5.9-66	6031-001547	WASHER-PLAIN	1	SNA	
5.9-67	6044-000125	RING-E	1	SNA	
5.9-68	JC61-01562A	GUIDE-M-DRIVE ITB	1	SNA	
5.9-69	JC66-01129A	ROLLER-DRIVE ITB	1	SNA	
5.9-70	JC66-01137A	GEAR-DRIVE ITB	1	SNA	
5.9-71	JC97-03003A	MEA UNIT-ROLLER IDLE	1	SNA	
5.9-73	JC61-01526A	GUIDE-M-BUSH IDL ITB R	1	SNA	
5.9-74	JC66-01130A	ROLLER-IDLE ITB	1	SNA	
5.9-75	JC97-03004A	MEA-GUIDE IDLE ITB	1	SNA	
5.9-76	JC61-02185A	GUIDE-BUSH IDLE L	1	SNA	
5.9-77	JC71-10322B	NPR-EARTH OPC	1	SNA	

IT-spares.eu

5.10 Cartridge-Drum

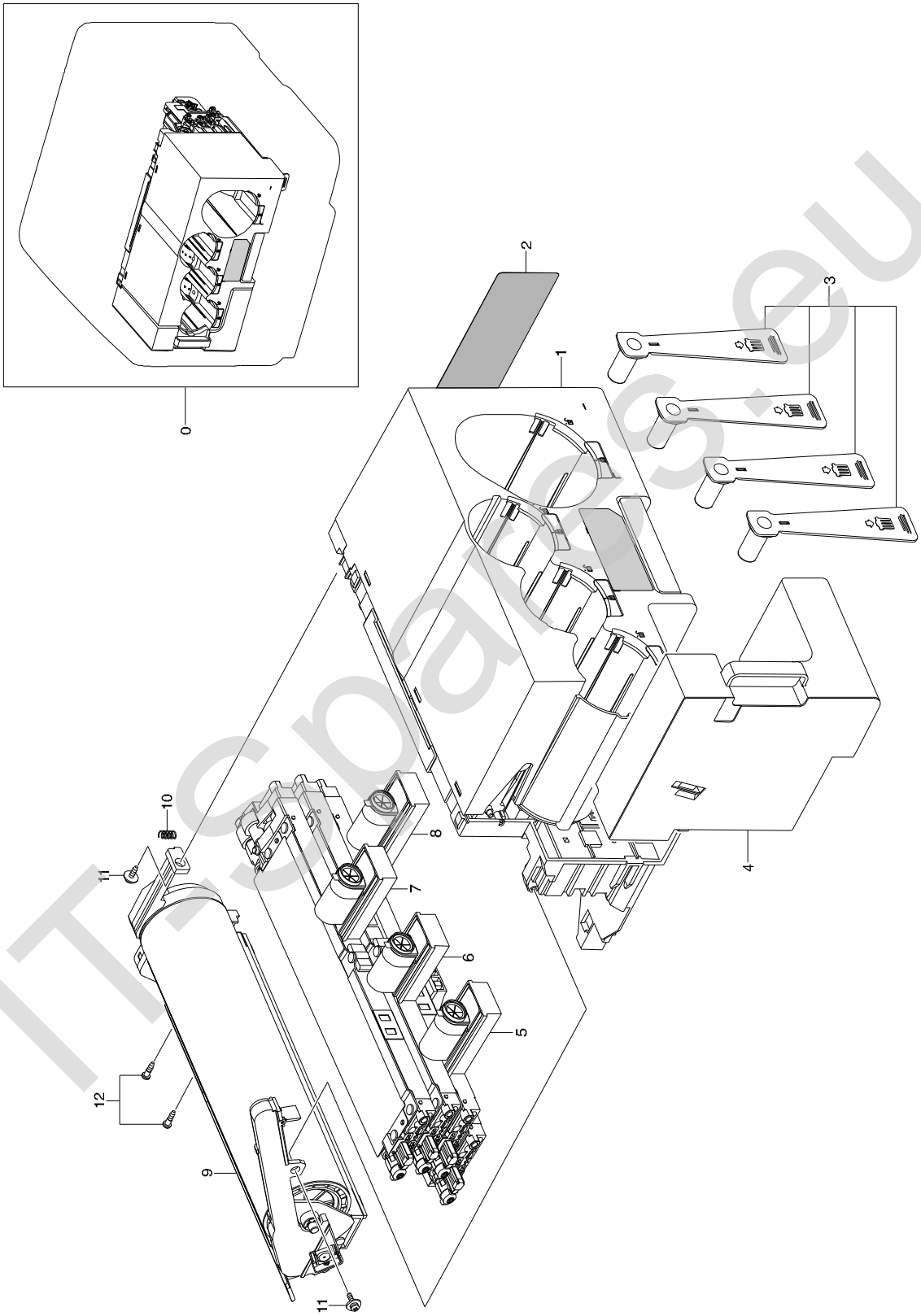

ITspares.eu

Cartridge-Drum Parts List

SA : SERVICE AVAILABLE, SNA : SERVICE not AVAILABLE

Drawer#	SEC_Code	Description	QT'y	Service	Remark
5.10-0	JC96-04760A	ELA UNIT-OPC DEV SET	1	SNA	
5.10-1	JC96-04728A	ELA UNIT-DEV_MAIN_SET	1	SNA	
5.10-2	JC69-01013A	CUSHION-DEVE	2	SNA	
5.10-3	JC67-00199A	CAP-DEVE	4	SA	
5.10-4	JC97-03031A	MEA UNIT-W_TONER_TANK	1	SNA	
5.10-5	JC97-02615D	MEA UNIT-DEV C	1	SNA	
5.10-6	JC97-02614D	MEA UNIT-DEV M	1	SNA	
5.10-7	JC97-02613D	MEA UNIT-DEV Y	1	SNA	
5.10-8	JC97-02616D	MEA UNIT-DEV K	1	SNA	
5.10-9	JC97-03076A	MEA UNIT-OPC SET	1	SNA	
5.10-10	6107-001292	SPRING-CS	1	SNA	
5.10-11	6003-000282	SCREW-TAPTITE	2	SNA	
5.10-12	6006-001078	SCREW-TAPTITE	2	SNA	

IT-Spares.eu

5.11 Toner BK

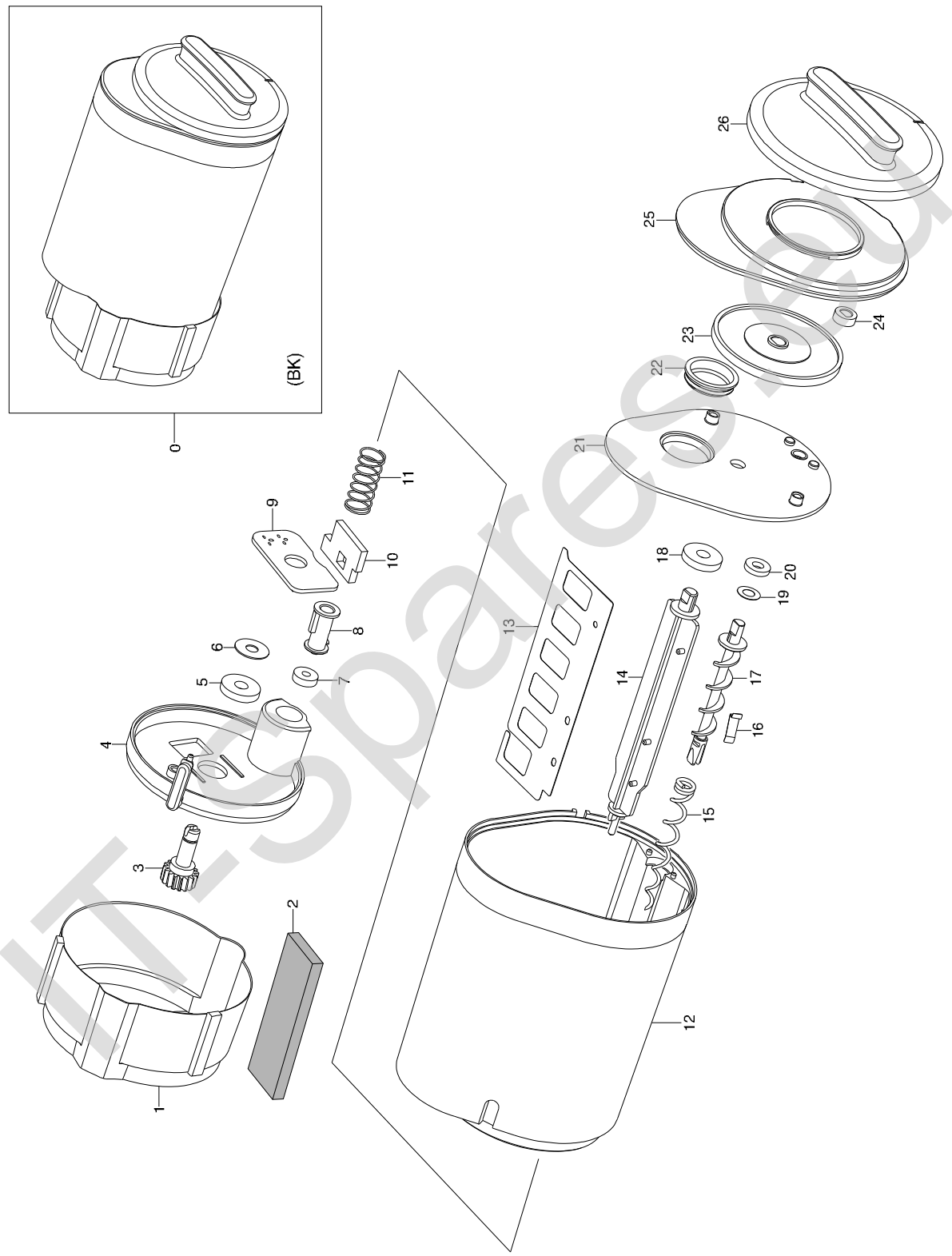

ITSparesEu

Toner BK Parts List

SA : SERVICE AVAILABLE, SNA : SERVICE not AVAILABLE

Drawer#	SEC_Code	Description	QT'y	Service	Remark
5.11-0	-	ELA UNIT-TONER TANK K	1	SNA	
5.11-1	JC67-00264A	CAP-BOTTLE BK	1	SNA	
5.11-2	JC72-01384A	SPONGE-CAP BOTTLE	1	SNA	
5.11-3	JC66-01095A	GEAR-AGITATOR BOTTLE	1	SNA	
5.11-4	JC67-00140A	CAP-M-CRUM BOTTLE BK	1	SNA	
5.11-6	6031-001577	WASHER-PLAIN	1	SNA	
5.11-8	JC64-00218A	SHUTTER-M-TONER BOTTLE	1	SNA	
5.11-9	-	TONER-CRUM	1	SNA	
5.11-10	JC63-01253A	SHEET-BOTTLE AUGER	1	SNA	
5.11-11	JC61-01677A	SPRING ETC-RETURN	1	SNA	
5.11-12	JC67-00259A	TANK-TONER BOTTLE BK	1	SNA	
5.11-13	JC63-01490A	SHEET-AGITATOR BK	1	SNA	
5.11-14	JC66-01591A	SHAFT-SPRING	1	SNA	
5.11-15	JC61-01676A	SPRING ETC-AUGER K	1	SNA	
5.11-17	JC66-01589A	SHAFT-AUGER	1	SNA	
5.11-21	JC63-01492A	COVER-INNER BK	1	SNA	
5.11-22	JG72-40960A	PMO-CAP TONER	1	SNA	
5.11-23	JC66-01139A	GEAR-AUGER A	1	SNA	
5.11-24	JC66-01141A	GEAR-AUGER Z15	1	SNA	
5.11-25	JC67-00260A	CAP-TONER BOTTLE BK	1	SNA	
5.11-26	JC64-00339A	HANDLE-BOTTLE BK	1	SNA	

IT-Spares.eu

5.12 Toner CMY

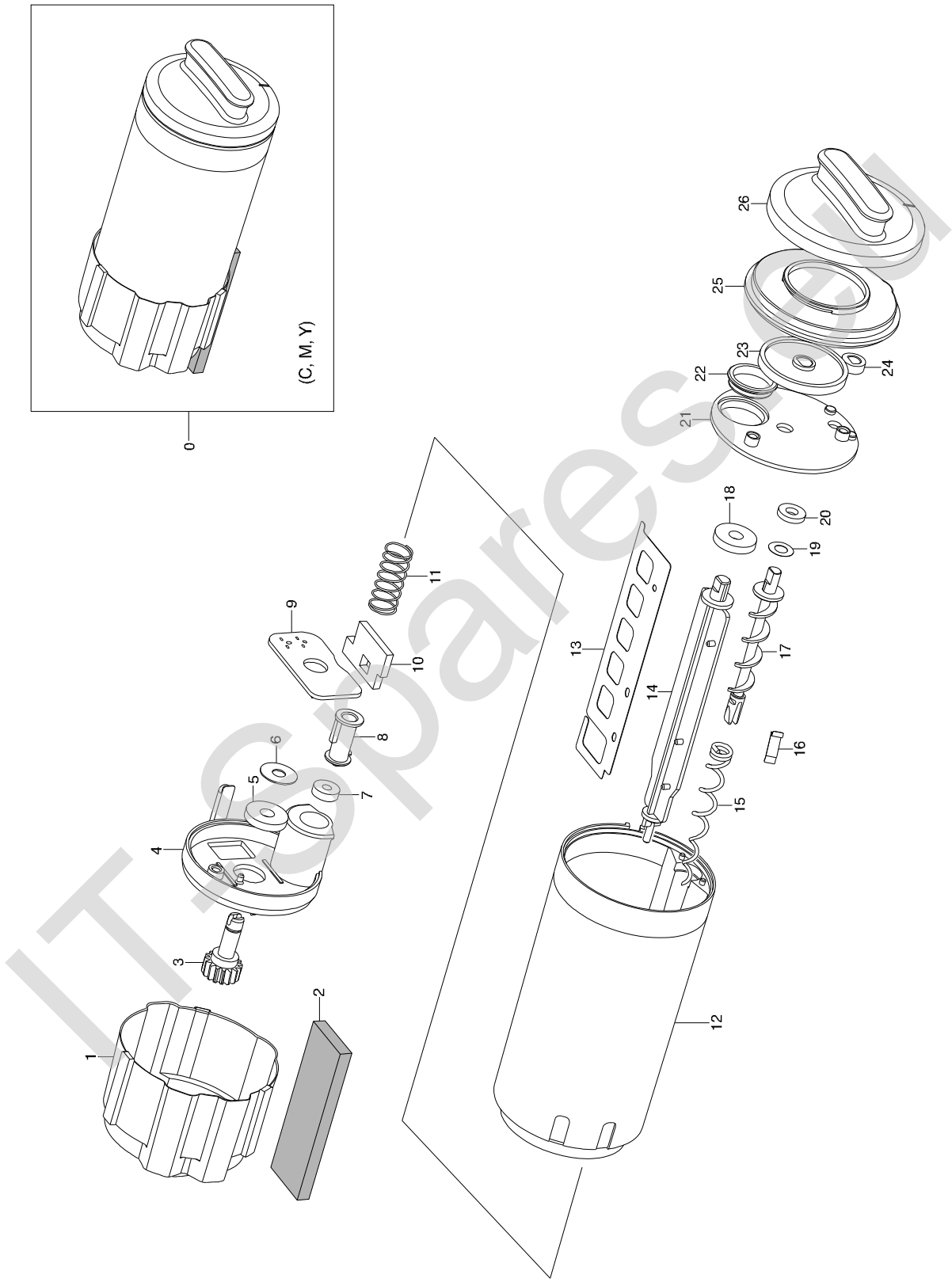

IT-Spares.eu

Toner CMY Parts List

SA : SERVICE AVAILABLE, SNA : SERVICE not AVAILABLE

Drawer#	SEC_Code	Description	QT'y	Service	Remark
5.12-0	-	ELA UNIT-TONER TANK C,M,Y	1	SNA	
5.12-1	JC67-00187A	CAP-BOTTLE	1	SNA	
5.12-2	JC72-01384A	SPONGE-CAP BOTTLE	1	SNA	
5.12-3	JC66-01095A	GEAR-AGITATOR BOTTLE	1	SNA	
5.12-4	JC67-00141A	CAP-M-CRUM BOTTLE	1	SNA	
5.12-6	6031-001577	WASHER-PLAIN	1	SNA	
5.12-8	JC64-00218A	SHUTTER-M-TONER BOTTLE	1	SNA	
5.12-9	-	TONER-CRUM	1	SNA	
5.12-10	JC63-01253A	SHEET-BOTTLE AUGER	1	SNA	
5.12-11	JC61-01677A	SPRING ETC-RETURN	1	SNA	
5.12-12	JC67-00258A	TANK-TONER BOTTLE	1	SNA	
5.12-13	JC63-01491A	SHEET-AGITATOR	1	SNA	
5.12-14	JC66-01591A	SHAFT-SPRING	1	SNA	
5.12-15	JC61-02391A	SPRING ETC-AUGER RU	1	SNA	
5.12-17	JC66-01589A	SHAFT-AUGER	1	SNA	
5.12-21	JC63-00894A	COVER-INNER	1	SNA	
5.12-22	JG72-40960A	PMO-CAP TONER	1	SNA	
5.12-23	JC66-01139A	GEAR-AUGER A	1	SNA	
5.12-24	JC66-01141A	GEAR-AUGER Z15	1	SNA	
5.12-25	JC67-00263A	CAP-TONER BOTTLE	1	SNA	
5.12-26	JC64-00340A	HANDLE-BOTTLE	1	SNA	

IT-Spares.eu

5.13 Cassette

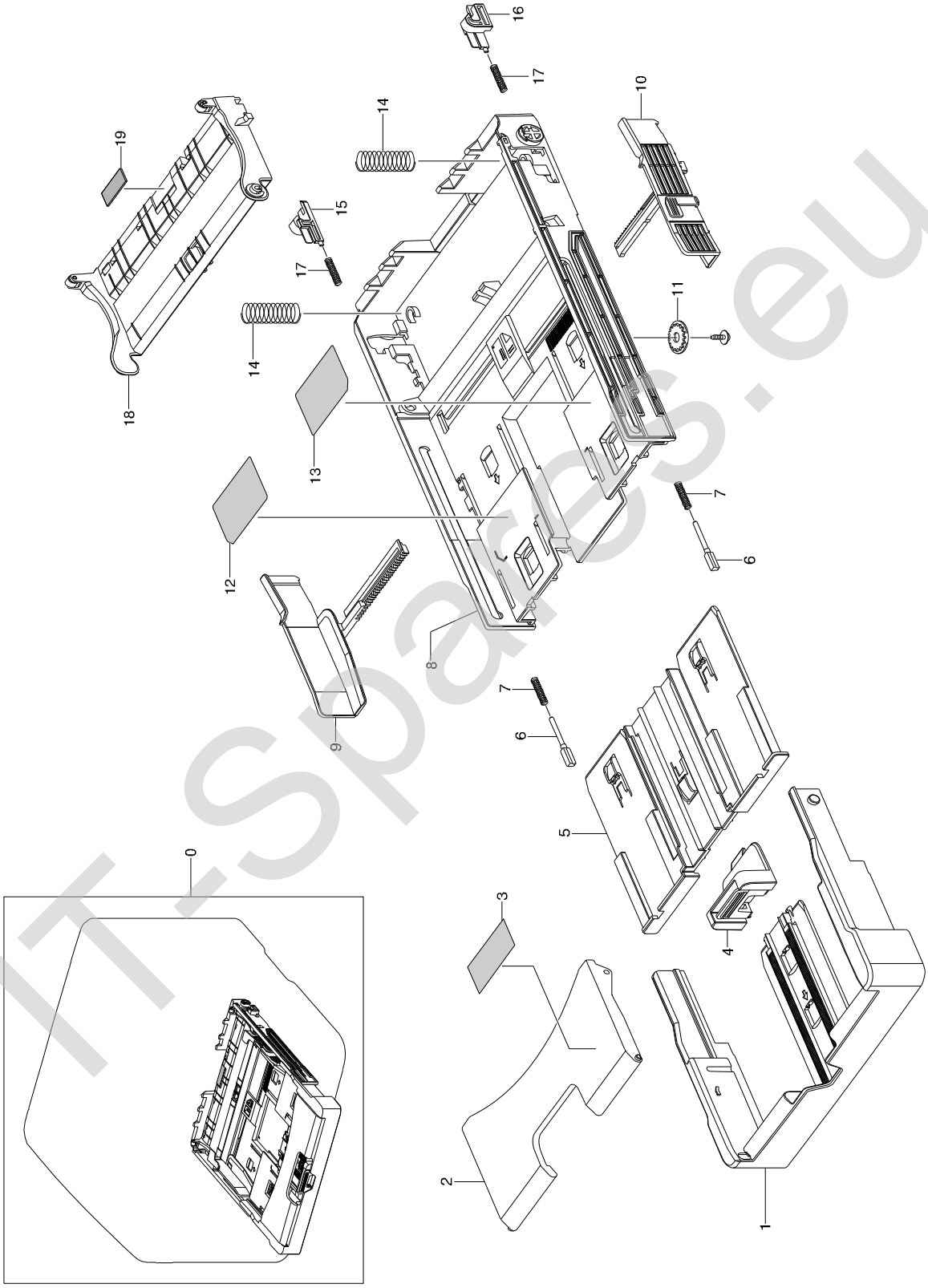

IT-Spares.eu

Cassette Parts List

SA : SERVICE AVAILABLE, SNA : SERVICE not AVAILABLE

Drawer#	SEC_Code	Description	QT'y	Service	Remark
5.13-0	JC97-02332D	MEA-UNIT CASSETTE	1	SA	
5.13-1	JC63-00869C	TRAY-EXTENSION SMALL	1	SNA	
5.13-2	JC63-00855A	COVER-M-CASSETTE	1	SA	
5.13-3	JC68-00780A	LABEL-WARNING	1	SNA	
5.13-4	JC61-01531A	STOPPER-PAPER REAR	1	SNA	
5.13-5	JC63-00872A	TRAY-M-EXIT CASSETTE	1	SNA	
5.13-8	JC61-01530C	FRAME-SEMI CASSETTE	1	SNA	
5.13-9	JC70-00516A	ADJUST-M-CASSETTE R	1	SA	
5.13-10	JC70-00517A	ADJUST-M-CASSETTE L	1	SA	
5.13-11	JG66-40003A	GEAR-PINION	1	SA	
5.13-12	JC68-01680A	LABEL-INSTRUCTION	1	SNA	
5.13-13	JF68-10532B	LABEL(P)-BAR CODE	1	SNA	
5.13-14	6107-001240	SPRING-CS	2	SNA	
5.13-15	JC64-00223A	LOCKER-M-KNOCK UP L	1	SA	
5.13-16	JC64-00222A	LOCKER-M-KNOCK UP R	1	SA	
5.13-17	JG61-70531A	SPRING ETC-LOCKER,PLATE	2	SA	
5.13-18	JC61-01158A	PLATE-M-KNOCK_UP	1	SA	

IT-Spares.eu

5.14 SCF-Frame 1

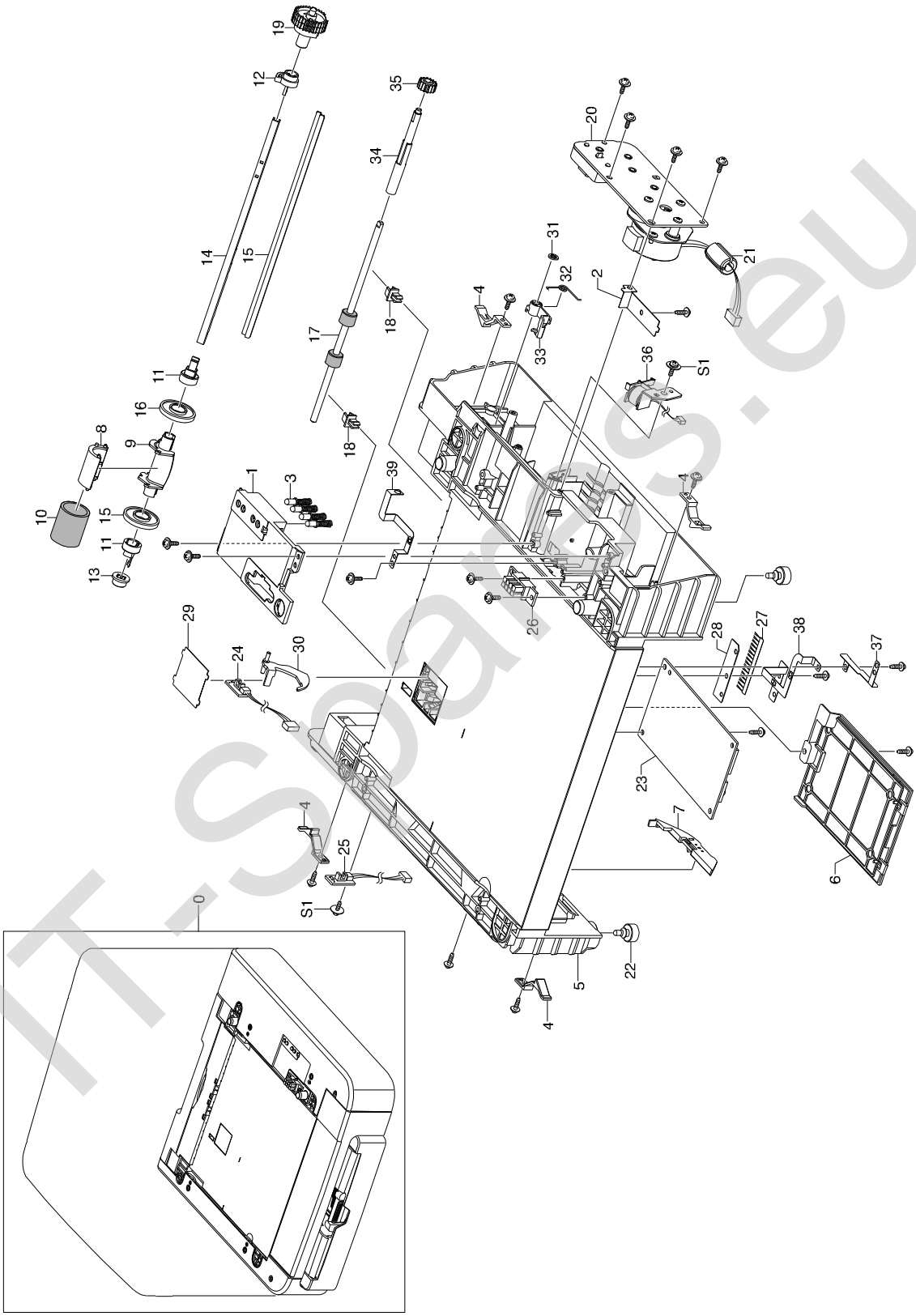

IT-Spares.eu

SCF-Frame 2

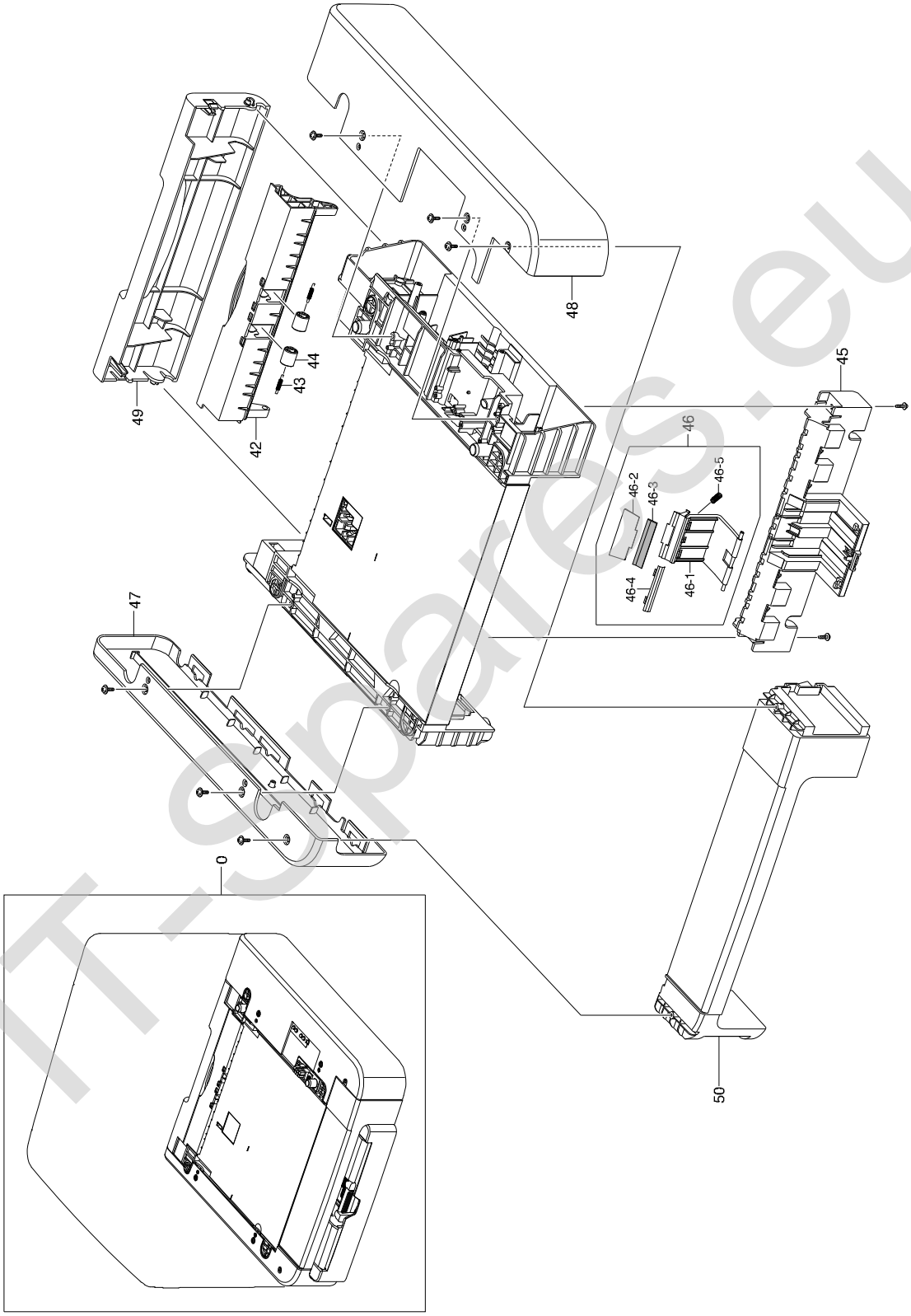

IT-spares.eu

SCF-Frame Parts List

SA : SERVICE AVAILABLE, SNA : SERVICE not AVAILABLE

Drawer#	SEC_Code	Description	QT'y	Service	Remark
5.14-0	JC96-04309A	ELA HOU-FRAME SCF	1	SNA	
5.14-1	JC63-01032A	COVER-M-GROUND	1	SA	
5.14-2	JC61-01661A	PLATE-P-COVER	1	SA	
5.14-3	JC97-02812A	MEA UNIT-TERMINAL GND	4	SA	
5.14-4	JC72-00983A	PMO-LOCKER CST	4	SA	
5.14-5	JC61-01666A	FRAME-M SCF	1	SNA	
5.14-6	JC63-00492A	COVER-M-SIMM R2	1	SA	
5.14-7	JC61-00937A	GUIDE-M-KNOCK UP	1	SA	
5.14-8	JC61-00909A	HOUSING-M-PICK UP_R2	1	SA	
5.14-9	JC61-00910A	HOUSING-M-PICK UP2_R2	1	SA	
5.14-10	JC72-01231A	SPONGE-ROLLER PICK_UP	1	SA	
5.14-11	JC61-00915A	STOPPER-M-PICK UP_R2	2	SA	
5.14-12	JC61-00586A	BUSH-M-PICK_UP L	1	SA	
5.14-13	JC61-00587A	BUSH-M-PICK_UP R	1	SA	
5.14-14	JC66-00399A	SHAFT-P-PICK_UP	1	SA	
5.14-15	JC66-00720A	SHAFT-P-CORE	2	SA	
5.14-16	JC72-00982A	PMO-IDLE PICK_UP	2	SA	
5.14-17	JC66-00598A	ROLLER-FEED	1	SA	
5.14-18	JC72-00382B	PMO-BUSHING FEED	2	SA	
5.14-19	JC97-02741A	MEA UNIT-GEAR PICKUP	1	SA	
5.14-20	JC96-03003A	ELA HOU-MOTOR SCF	1	SA	
5.14-21	3301-001635	CORE-FERRITE	1	SNA	
5.14-22	JC61-40001A	FOOT-ML80	2	SA	
5.14-23	JC92-01832A	PBA SUB-SCF	1	SA	
5.14-24	JC92-01799A	PBA SUB-SCF_EMP	1	SA	
5.14-25	JC92-01800A	PBA SUB-SCF_OPEN	1	SA	
5.14-26	JC39-00102A	CBF HARNESS-SCF_8P	1	SA	
5.14-27	JC67-00201A	BRUSH-ANTISTATIC_SCF	1	SNA	
5.14-28	JC63-00527A	SHEET-BRUSH	1	SA	
5.14-29	JC63-00369A	SHEET-COVER SENSOR	1	SA	
5.14-30	JC72-00975A	PMO-ACTUATOR EMPTY	1	SA	
5.14-31	6044-000001	RING-CS	1	SNA	
5.14-32	6107-001170	SPRING-TS	1	SA	
5.14-33	JC66-00377A	CAM-M-PICK_UP	1	SA	
5.14-34	JC66-01214A	SHAFT-M-FEED	1	SA	
5.14-35	JC66-00394A	GEAR-FEED 2	1	SA	
5.14-36	JC33-00010C	SOLENOID-SCF	1	SA	
5.14-37	JC63-01039A	GROUND-P-PBA	1	SNA	
5.14-38	JC63-01040A	GROUND-P-FEED_ROLL	1	SA	
5.14-39	JC63-01041A	GROUND-P-DRIVE	1	SNA	
5.14-40	6003-000196	SCREW-TAPTITE	19	SNA	
5.14-41	6006-001078	SCREW-TAPTITE	2	SNA	
5.14-42	JC63-01031A	COVER-M-JAM	1	SA	

IT-spares.eu

SCF-Frame Parts List

SA : SERVICE AVAILABLE, SNA : SERVICE not AVAILABLE

Drawer#	SEC_Code	Description	QT'y	Service	Remark
5.14-43	6107-001047	SPRING-ES	2	SA	
5.14-44	JC66-00529A	ROLLER-M-IDLE FEED	2	SA	
5.14-45	JC61-01657A	GUIDE-M-PICK UP	1	SA	
5.14-46	JC61-00580A	HOLDER-M-PAD	1	SA	
5.14-47	JC63-00290A	SHEET-HOLDER PAD	1	SA	
5.14-48	JC73-00140A	RPR-FRICTION PAD	1	SA	
5.14-49	JC70-00314A	IPR-PLATE PAD	1	SA	
5.14-50	JC61-70911A	SPRING ETC-EXIT ROLL FD	1	SA	
5.14-51	JC63-01033A	COVER-M-LEFT SCF	1	SA	
5.14-52	JC63-01034A	COVER-M-RIGHT SCF	1	SA	
5.14-53	JC63-01035A	COVER-M-REAR SCF	1	SA	

IT-Spares.eu

5.15 SCF Cassette

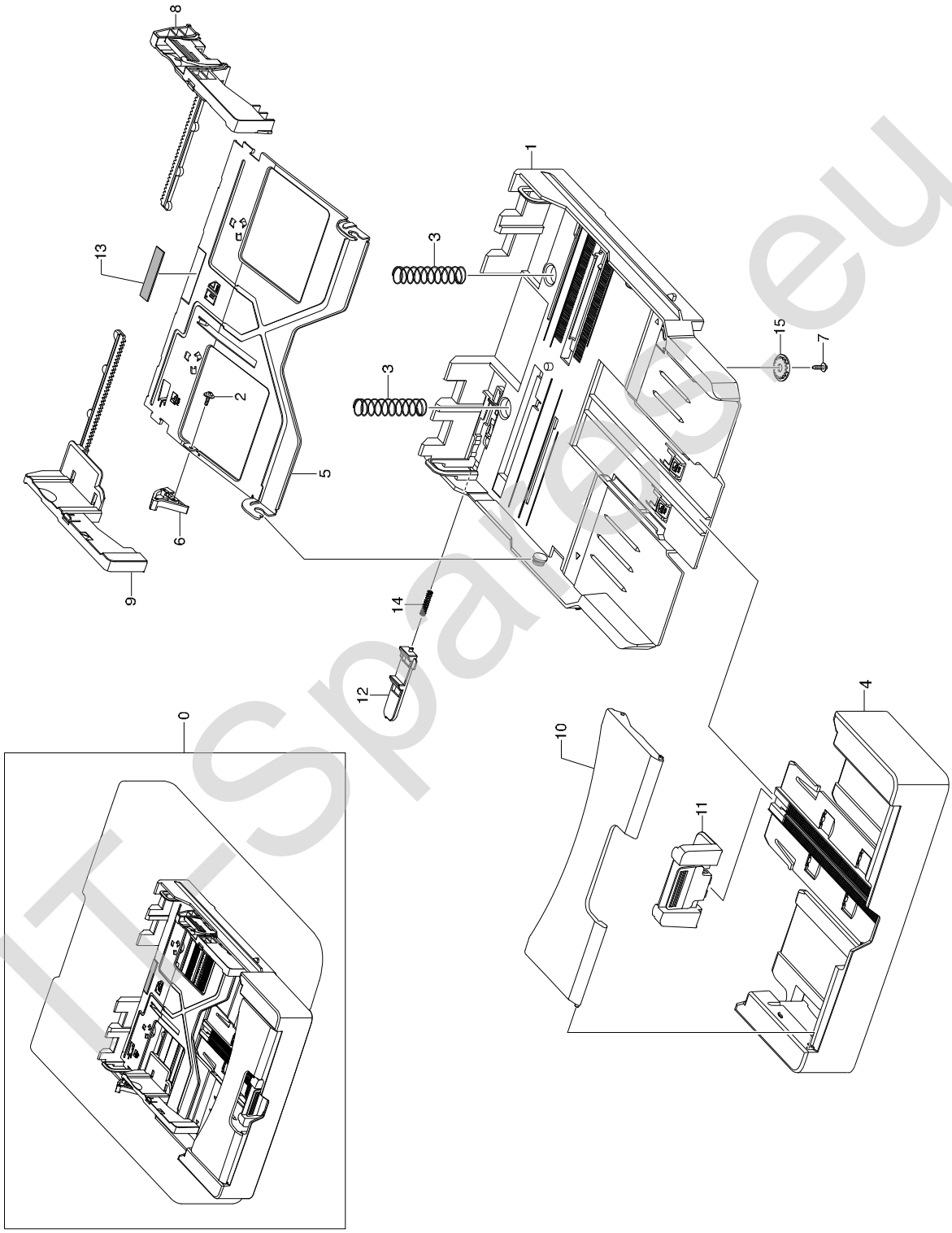

ITSpares.eu

SCF Cassette Parts List

SA : SERVICE AVAILABLE, SNA : SERVICE not AVAILABLE

Drawer#	SEC_Code	Description	QT'y	Service	Remark
5.15-0	JC97-02742C	MEA UNIT-CASSETTE	1	SA	
5.15-1	JC61-01658C	FRAME-CASSETTE SCF	1	SNA	
5.15-2	6003-000269	SCREW-TAPTITE	1	SA	
5.15-3	6107-001166	SPRING-CS	2	SA	
5.15-4	JC63-01036C	COVER-FRONT SCF	1	SA	
5.15-5	JC61-01662A	PLATE-P-KNOCKUP SCF	1	SA	
5.15-6	JC66-00719A	CAM-M-KNOCK UP	1	SA	
5.15-7	6003-000264	SCREW-TAPTITE	1	SNA	
5.15-8	JC70-00523A	ADJUST-M-SCF R	1	SA	
5.15-9	JC70-00524A	ADJUST-M-SCF L	1	SA	
5.15-10	JC63-00855A	COVER-M-CASSETTE	1	SA	
5.15-11	JC61-01664A	GUIDE-M REAR SCF	1	SA	
5.15-12	JC72-00972A	PMO-PLATE_LOCKER	1	SA	
5.15-13	JC73-00141A	RPR-PAD CASSETTE	1	SA	
5.15-14	JG61-70531A	SPRING ETC-LOCKER,PLATE	1	SA	
5.15-15	JG66-40003A	GEAR-PINION	1	SA	

IT-Spares.eu